Digital temperature transmitter for resistance sensors T15

Modelcode type: T15

Item number: 14139903

Digital temperature transmitter for resistance sensors T15	
Design	Head
Housing	
Material	Plastic PBT, glass-fibre reinforced
Weight	45 g
Ingress Protection	IP00 (Electronics completely potted)
Connection terminals	Captive screws
Wire cross-section	Solid wire 0.14 ... 2.5 mm² (AWG 24 ... 14)
Wire cross-section	Wire with end splice 0.14 ... 1.5 mm² (AWG 24 ... 16)
Screwdriver	Cross head (Pozidrive tip), size 2 (ISO 8764)
Tightening torque	0,5 Nm
Ambient conditions	
Permissible ambient temperature transmitter	Standard -40...85°C
Climate class per IEC 654-1:1993	Cx (-40 ... +85 °C, 5 ... 95 % r. F.)
Vibration resistance per IEC 60068-2-6:2008	Test Fc: 10 ... 2,000 Hz; 10 g, amplitude 0.75 mm
Shock resistance per IEC 68-2-27:2009	Acceleration / shock width
Shock resistance per IEC 68-2-27:2009	100 g / 6 ms
Salt fog	Acc. IEC 68-2-52:1996, IEC 60068-2-52:1996
Condensation	Acceptable
Free fall - in line with IEC 60721-3-2:1997, DIN EN 60721-3-2:1998	Drop height 1.5 m

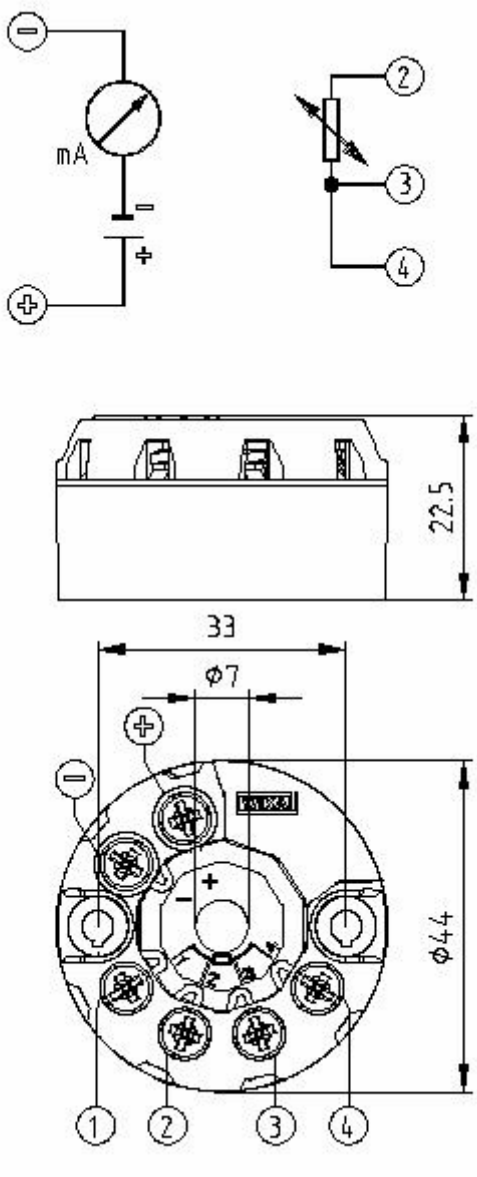

© Copyright by WIKA: Reproduction of this document is prohibited

WIKA Instruments SARL
38 avenue du Gros Chêne
95220 Herblay
France

33.(0)820.95.10.10

info@wika.fr
www.wika.fr

Digital temperature transmitter for resistance sensors T15

Modelcode type: **T15**

Item number: **14139903**

Electromagnetic compatibility (EMC)	Acc. DIN EN 55011:2010, DIN EN 61326-2-3:2013 NAMUR NE21:2012, GL 2012 VI Part 7 Emission (group 1, class B) and interference immunity (industrial application) [HF field, HF cable, ESD, Burst, Surge]

Temperature transmitter input

Configuration sensor	Pt100
Standard	Per IEC 60751:2008
Measuring current at the measurement	Max. 0,2 mA
Input configuration	3-wire
Lead resistance / wire resistance	Max. 50 ? each wire
Unit	°C
Measuring range start value - sign	Plus (incl. 0)
Measuring range start value	0
Measuring range end value - sign	Plus (incl. 0)
Measuring range end value	150

Time response

Switch-on time (time to get the first measured value)	Max. 3 s
Warm-up time	After max. 4 minutes the instrument will function to the specifications (accuracy)
Response time	< 0,4 s
Typical measuring rate	Measured value update with 2- and 4-wire connection, approx 20/s With 3-wire connection/potentiometer, approx. 5/s

Monitoring

Transmitter Signalling of error	Down scale 3,5 mA
Measuring range monitoring	Deactivated (Monitoring of the set measuring range for upper/lower deviations configurable)
Drag pointer (internal temperature of the electronics)	Comparative value in relation to the permissible ambient temperature

Specifications

Output signal	4...20mA
Reference conditions	Calibration temperature Tref = 23 °C ±3 K Power supply Ui_ref = 24 V Atmospheric pressure = 860 .. 1,060 hPa All accuracy specifications refer to the reference conditions.

Accuracy specifications

Measuring deviation per DIN EN 60770, NE145	0.2 K or 0.1 % (greater value applies)
Measuring deviation per DIN EN 60770, NE145	MS < 200 K: 0.2 K / MS > 200 K: 0.1 % of MS
Mean temperature coefficient (TC) every 1 K ambient temperature deviation from Tref	? ±0,01 % of MS
Influence of power supply every 1 V voltage change from Ui_ref	±0,005 % of MS

© Copyright by WIKA: Reproduction of this document is prohibited

WIKA Instruments SARL
38 avenue du Gros Chêne
95220 Herblay
France

33.(0)820.95.10.10

info@wika.fr
www.wika.fr

Digital temperature transmitter for resistance sensors T15

Modelcode type: **T15**

Item number: **14139903**

Long-term drift in line with IEC 61298-2 per year	< 0,1 % of MS
Approvals / certificates	
Explosion protection	Without
Power supply	
Load RA	RA ? (UB - 8 V) / 0.0215 A with RA in ? and UB in V
Certificates	
Certificates	Without

© Copyright by WIKA: Reproduction of this document is prohibited

WIKA Instruments SARL
38 avenue du Gros Chêne
95220 Herblay
France

33.(0)820.95.10.10

info@wika.fr
www.wika.fr