DATASHEET - ZE-6



Overload relay, Ir= 4 - 6 A, 1 N/O, 1 N/C, Direct mounting

Part no.	**ZE-6**
Catalog No.	**014565**
Alternate Catalog No.	**XTOM006AC1**
EL-Nummer (Norway)	**4130482**

Delivery program

Product range			ZE overload relays for mini contactor relays
Phase-failure sensitivity			IEC/EN 60947, VDE 0660 Part 102
Description			Test/off button Reset pushbutton manual/auto Trip-free release
Mounting type			Direct mounting
Setting range			
Overload releases	I_r	A	4 - 6
Contact sequence			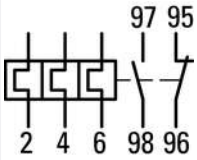
Auxiliary contacts			
N/O = Normally open			1 N/O
N/C = Normally closed			1 N/C
For use with			DILEM DIULEM/21/MV
Short-circuit protection			
Type “1” coordination	gG/gL	A	35
Type “2” coordination	gG/gL	A	10

Notes

Overload trigger: tripping class 10 A

Short circuit protection: observe the maximum permissible fuse of the contactor with direct device mounting.

Suitable for protection of Ex e-motors

II(2)G [Ex d] [Ex e] [Ex px]
II(2)D [Ex p] [Ex t]

PTB 10 ATEX 3014

Observe manual MN03407003Z-DE/EN.

Notes
When fitted directly to the contactor a clearance of at least 5 mm is required between the overload relays.

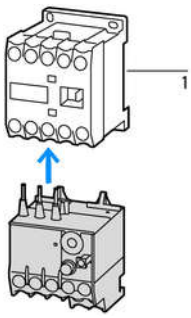

1 Contactor

Technical data

General

Standards			IEC/EN 60947, VDE 0660, UL, CSA
Climatic proofing			Damp heat, constant, to IEC 60068-2-78 Damp heat, cyclic, to IEC 60068-2-30
Ambient temperature			
			Operating range to IEC/EN 60947 PTB: -5 °C - +55 °C
Open		°C	-25 - +50
Enclosed		°C	- 25 - 40
Temperature compensation			Continuous
Weight		kg	0.078
Mechanical shock resistance		g	10 Sinusoidal Shock duration 10 ms
Degree of Protection			IP20
Protection against direct contact when actuated from front (EN 50274)			Finger and back-of-hand proof
Altitude		m	Max. 2000

Main conducting paths

Rated impulse withstand voltage	U_{imp}	V AC	6000
Overvoltage category/pollution degree			III/3
Rated insulation voltage	U_i	V	690
Rated operational voltage	U_e	V AC	690
Safe isolation to EN 61140			
Between auxiliary contacts and main contacts		V AC	300
Between main circuits		V AC	300
Temperatur compensation residual error > 40 °C			≦ 0.25 %/K
Current heat loss (3 conductors)			
Lower value of the setting range		W	2.5
Maximum setting		W	5.4
Terminal capacities		mm^2	
Solid		mm^2	1 x (0.75 - 2.5)
Flexible with ferrule		mm^2	1 x (0.5 - 1.5)
Solid or stranded		AWG	18 - 14
Terminal screw			M3.5
Tightening torque		Nm	1.2
Stripping length		mm	8
Tools			
Pozidriv screwdriver		Size	2
Standard screwdriver		mm	0.8 x 5.5

Auxiliary and control circuits

Rated impulse withstand voltage	U_{imp}	V	4000
Overvoltage category/pollution degree			III/3
Terminal capacities		mm^2	
Solid		mm^2	1 x (0.75 - 2.5) 2 x (0.75 - 2.5)
Flexible with ferrule		mm^2	1 x (0.5 - 1.5)

			2 x (0.5 - 1.5)
Solid or stranded		AWG	2 x (18 - 12)
Terminal screw			M3.5
Tightening torque		Nm	1.2
Stripping length		mm	8
Tools			
Pozidriv screwdriver		Size	2
Standard screwdriver		mm	0.8 x 5.5
Rated insulation voltage	U_i	V AC	500
Rated operational voltage	U_e	V AC	500
Safe isolation to EN 61140			
between the auxiliary contacts		V AC	250
Conventional thermal current	I_{th}	A	6
Rated operational current	I_e	A	
AC-15			
Make contact			
120 V	I_e	A	1.5
220 V 230 V 240 V	I_e	A	1.5
380 V 400 V 415 V	I_e	A	0.7
500 V	I_e	A	0.5
Break contact			
120 V	I_e	A	1.5
220 V 230 V 240 V	I_e	A	1.5
380 V 400 V 415 V	I_e	A	0.7
500 V	I_e	A	0.5
DC L/R ≦ 15 ms			
			Switch-on and switch-off conditions based on DC-13, time constant as specified.
24 V	I_e	A	0.9
60 V	I_e	A	0.75
110 V	I_e	A	0.4
220 V	I_e	A	0.2
Short-circuit rating without welding			
max. fuse		A gG/gL	4

Notes

Notes Ambient air temperature: Operating range to IEC/EN 60947, PTB: -5°C to +50°C
Main circuits terminal capacity solid and flexible conductors with ferrules: When using 2 conductors use equal cross-sections.

Rating data for approved types

Auxiliary contacts			
Pilot Duty			
AC operated			D300
DC operated			R300
General Use			
AC		V	240 V/1,5 A 600 V/0,6 A
Short Circuit Current Rating		SCCR	
Basic Rating			
Notes			CB for max. 480 V
SCCR		kA	5
max. Fuse		A	20
max. CB		A	15

Design verification as per IEC/EN 61439

Technical data for design verification			
Rated operational current for specified heat dissipation	I_n	A	6
Heat dissipation per pole, current-dependent	P_{vid}	W	1.8

Equipment heat dissipation, current-dependent	P_{vid}	W	5.4
Static heat dissipation, non-current-dependent	P_{vs}	W	0
Heat dissipation capacity	P_{diss}	W	0
Operating ambient temperature min.		°C	-25
Operating ambient temperature max.		°C	50
IEC/EN 61439 design verification			
10.2 Strength of materials and parts			
10.2.2 Corrosion resistance			Meets the product standard's requirements.
10.2.3.1 Verification of thermal stability of enclosures			Meets the product standard's requirements.
10.2.3.2 Verification of resistance of insulating materials to normal heat			Meets the product standard's requirements.
10.2.3.3 Verification of resistance of insulating materials to abnormal heat and fire due to internal electric effects			Meets the product standard's requirements.
10.2.4 Resistance to ultra-violet (UV) radiation			Meets the product standard's requirements.
10.2.5 Lifting			Does not apply, since the entire switchgear needs to be evaluated.
10.2.6 Mechanical impact			Does not apply, since the entire switchgear needs to be evaluated.
10.2.7 Inscriptions			Meets the product standard's requirements.
10.3 Degree of protection of ASSEMBLIES			Does not apply, since the entire switchgear needs to be evaluated.
10.4 Clearances and creepage distances			Meets the product standard's requirements.
10.5 Protection against electric shock			Does not apply, since the entire switchgear needs to be evaluated.
10.6 Incorporation of switching devices and components			Does not apply, since the entire switchgear needs to be evaluated.
10.7 Internal electrical circuits and connections			Is the panel builder's responsibility.
10.8 Connections for external conductors			Is the panel builder's responsibility.
10.9 Insulation properties			
10.9.2 Power-frequency electric strength			Is the panel builder's responsibility.
10.9.3 Impulse withstand voltage			Is the panel builder's responsibility.
10.9.4 Testing of enclosures made of insulating material			Is the panel builder's responsibility.
10.10 Temperature rise			The panel builder is responsible for the temperature rise calculation. Eaton will provide heat dissipation data for the devices.
10.11 Short-circuit rating			Is the panel builder's responsibility. The specifications for the switchgear must be observed.
10.12 Electromagnetic compatibility			Is the panel builder's responsibility. The specifications for the switchgear must be observed.
10.13 Mechanical function			The device meets the requirements, provided the information in the instruction leaflet (IL) is observed.

Technical data ETIM 7.0

Low-voltage industrial components (EG000017) / Thermal overload relay (EC000106)			
Electric engineering, automation, process control engineering / Low-voltage switch technology / Overload protection device / Thermal overload relay (ecl@ss10.0.1-27-37-15-01 [AKF075014])			
Adjustable current range		A	4 - 6
Max. rated operation voltage Ue		V	690
Mounting method			Direct attachment
Type of electrical connection of main circuit			Screw connection
Number of auxiliary contacts as normally closed contact			1
Number of auxiliary contacts as normally open contact			1
Number of auxiliary contacts as change-over contact			0
Release class			CLASS 10
Reset function input			No
Reset function automatic			Yes
Reset function push-button			Yes

Approvals

Product Standards			UL 508; CSA-C22.2 No. 14; IEC/EN 60947-4-1; IEC/EN 60947-5-1; CE marking
UL File No.			E29184
UL Category Control No.			NKCR
CSA File No.			12528
CSA Class No.			3211-03
North America Certification			UL listed, CSA certified

Specially designed for North America		No
Suitable for		Branch circuits
Max. Voltage Rating		600 V AC
Degree of Protection		IEC: IP20, UL/CSA Type: -

Characteristics

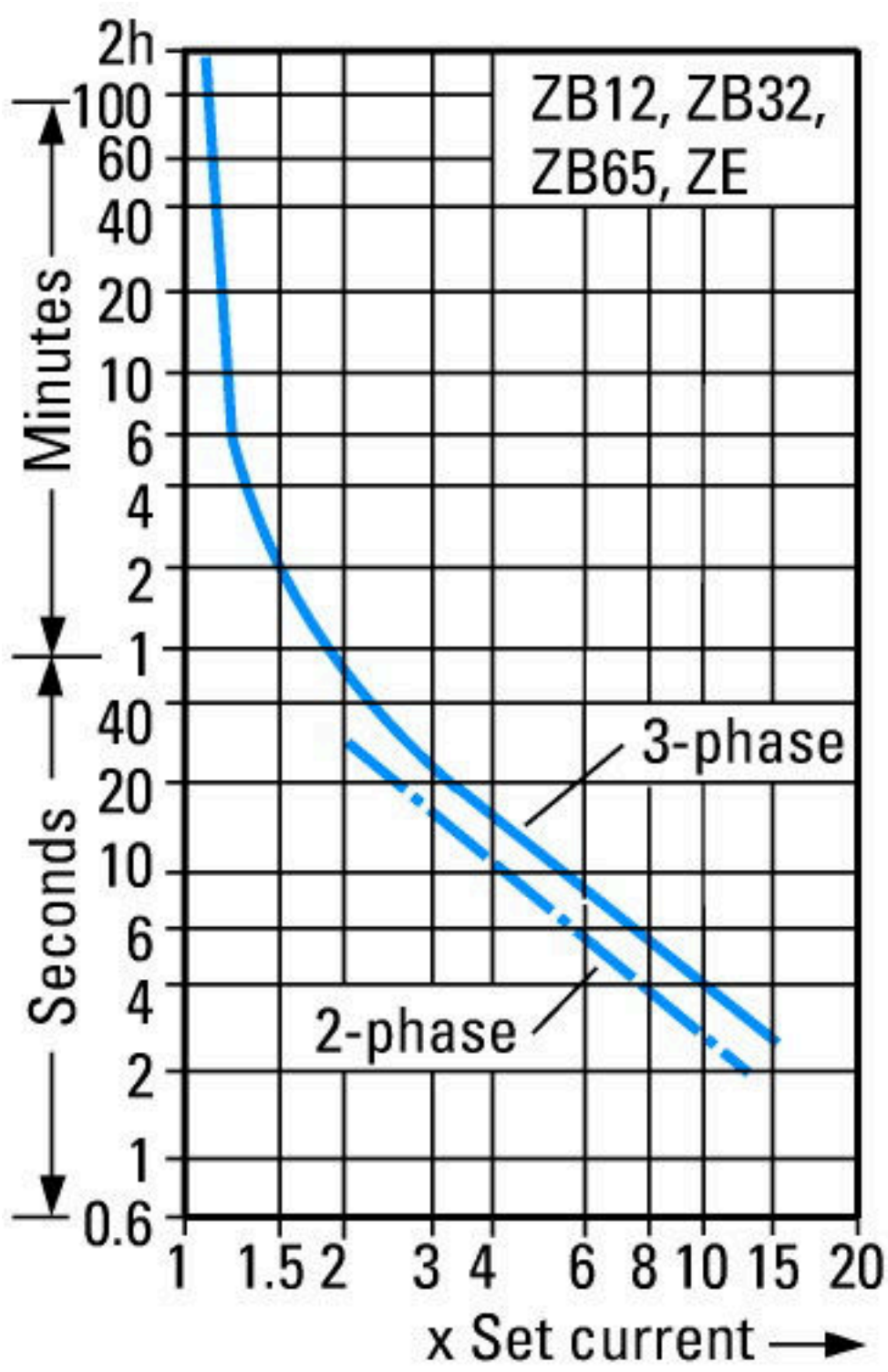

These tripping characteristics are mean values of the spreads at 20 °C ambient air temperature in a cold state.
Tripping time depends on response current.
When the devices are at operational temperature the tripping time of the overload relay falls to approx. 25 % of the read off value.
1: Minimum level, 3-phase
2: Maximum level, 3-phase
3: Minimum marker, 2-phase
4: Highest marker, 2-phase

Dimensions

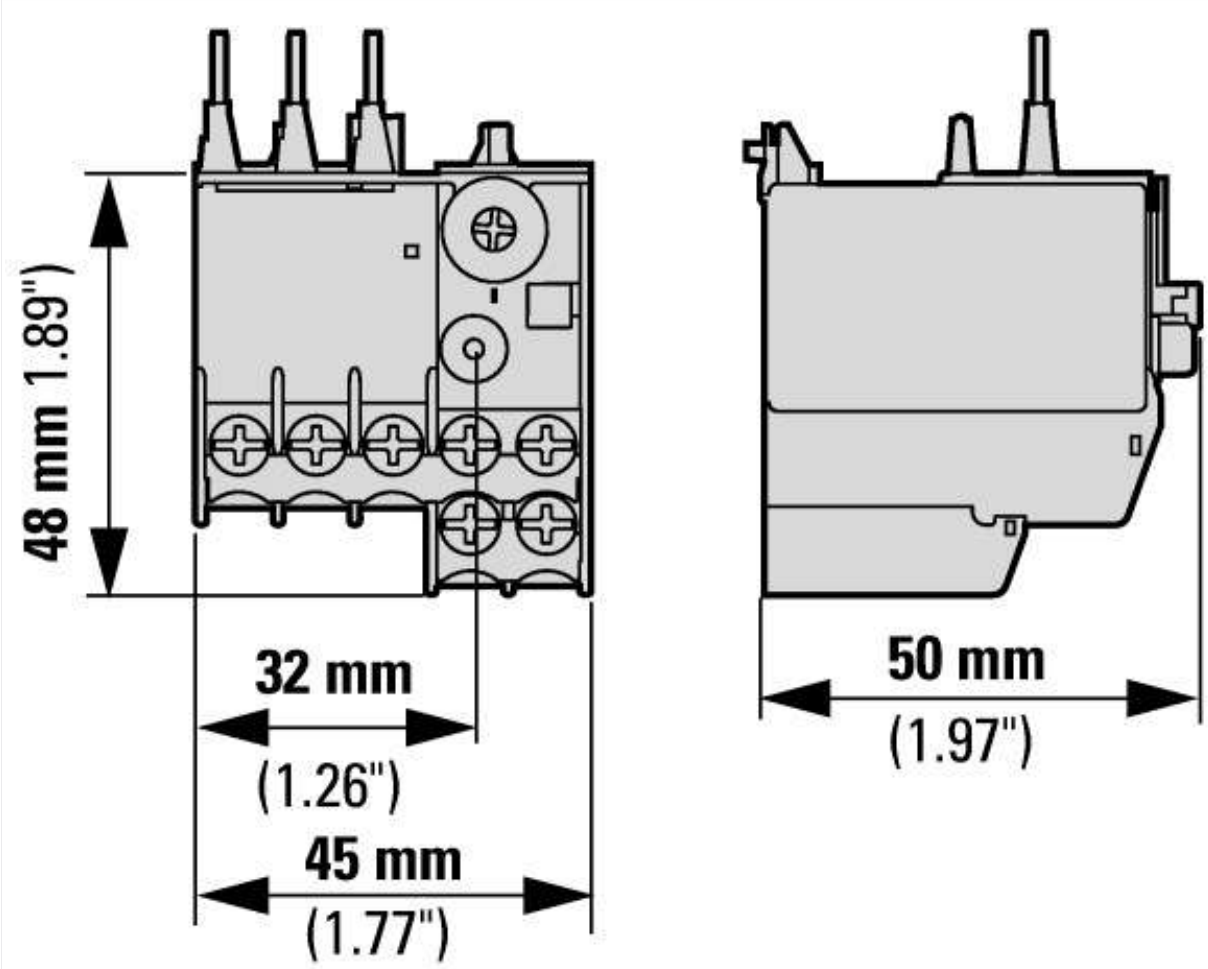

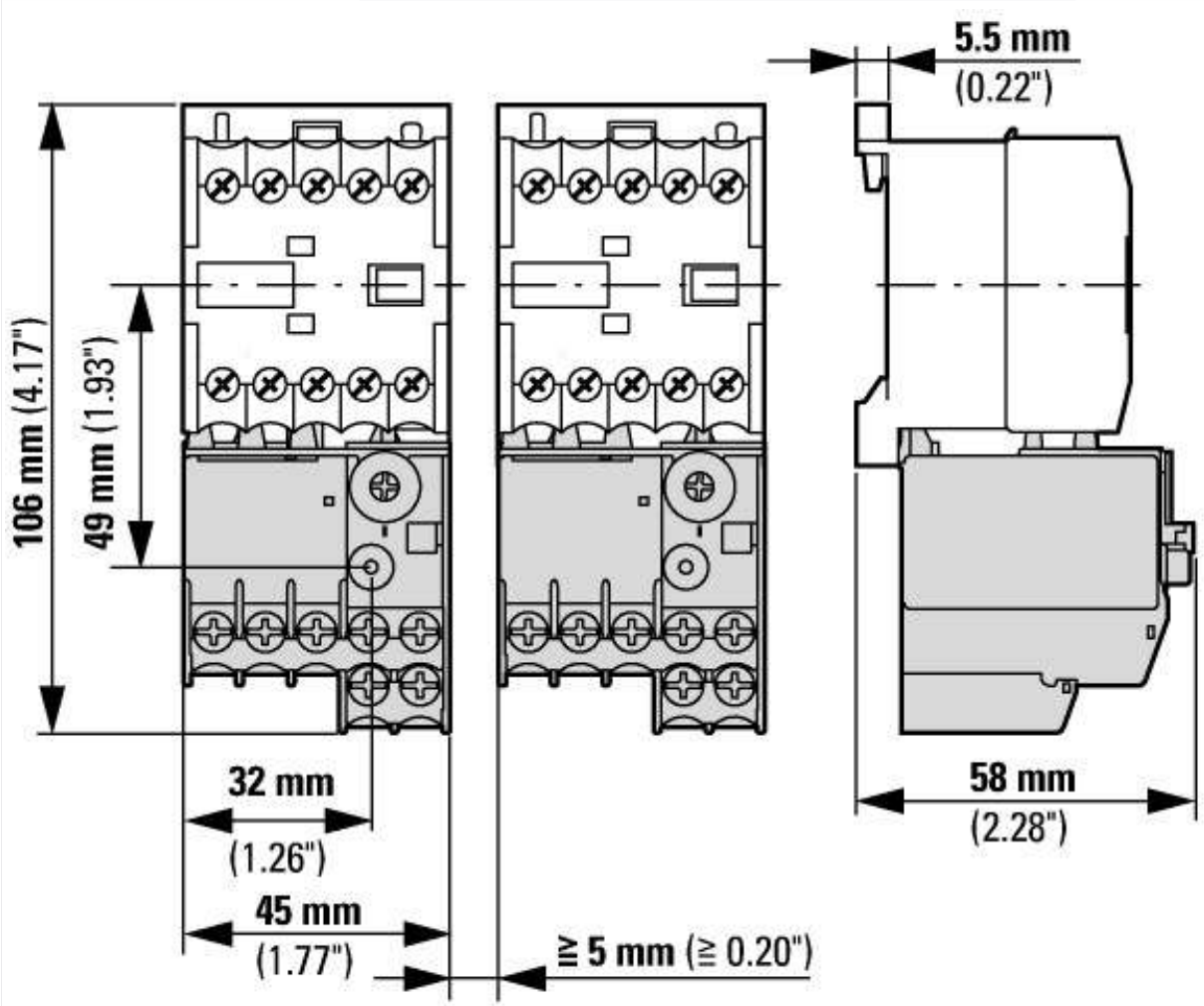

ZE-... + DIL(E)EM-...(-G)

© 02/2021 by Eaton Industries GmbH