WORLD-BEAM® QS30 – Universal Voltage

Self-contained photoelectric sensors in universal-style housing

Installation Guide

Additional information on this product is immediately available online at www.bannerengineering.com/119166

View or download additional information, including excess gain curves, beam patterns and accessories.
For further assistance, contact a Banner Engineering Applications Engineer at (763) 544-3164 or (888) 373-6767.



c UL us LISTED

Sensing Mode		Range	Output	Model*
875 nm Infrared Effective Beam: 18 mm (0.7")	**Opposed**	60 m (200')	–	**QS303E**
			SPDT	**QS30VR3R**
630 nm Visible Red	**Polarized Retroreflective**	8 m (26')†		**QS30VR3LP**
680 nm Visible Red	**Fixed-Field**	200 mm (8")		**QS30VR3FF200**
		400 mm (16")		**QS30VR3FF400**
		600 mm (24")		**QS30VR3FF600**

*Only standard 2 m (6.5') cable models are listed. For 9 m (30') integral cable, add suffix "**W/30**" to the model number (e.g., **QS303E W/30**).
QD models: Contact Factory for availability.
† Range is measured using a model **BRT-84** retroreflector.

Hookups

Emitters

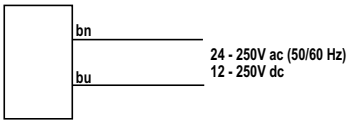

All Other Models

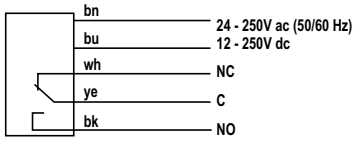

Dimensions

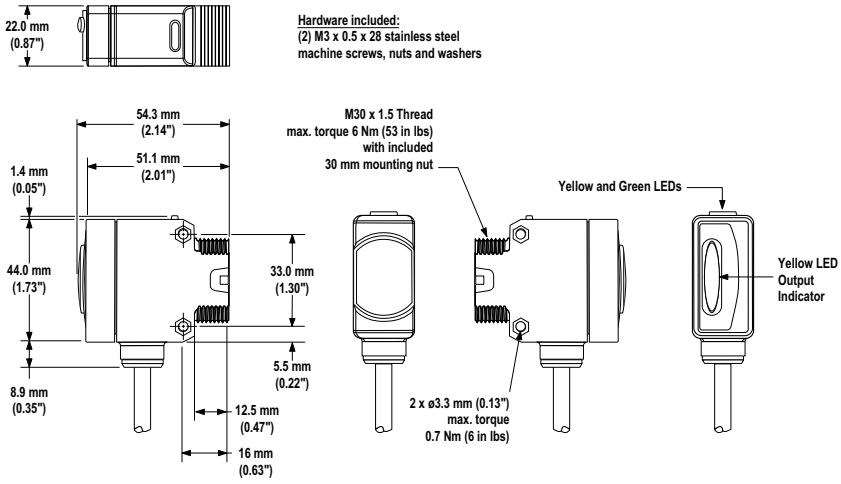

WARNING . . . Not To Be Used for Personnel Protection

Never use these products as sensing devices for personnel protection. Doing so could lead to serious injury or death. These sensors do NOT include the self-checking redundant circuitry necessary to allow their use in personnel safety applications. A sensor failure or malfunction can cause either an energized or de-energized sensor output condition. Consult your current Banner Safety Products catalog for safety products which meet OSHA, ANSI and IEC standards for personnel protection.

WORLD BEAM® QS30 – Universal Voltage

Specifications

Supply Voltage and Current
Universal Voltage: 24 to 250V ac, 50/60 hz or
12 to 250V dc (1.0 watt maximum)
Supply Protection Circuitry
Protected against transient voltages
Output Configuration
SPDT (Single-Pole Double-Throw) electromechanical relay output
(all models except emitters)
Output Rating
Max. Switching Power (resistive load): 150 W, 1250 VA
Max. Switching Voltage (resistive load): 250V ac; 125V dc
Max. Switching Current (resistive load):
5 A @ 250V ac
5 A @ 30V dc derated to 200 mA @ 125V dc
Min. Voltage and Current: 5V dc, 10 mA
Mechanical life of relay: 50 million operations
Electrical life of relay at full resistive load: 100,000 operations
Output Response Time
15 milliseconds ON and OFF
NOTE: 100 millisecond delay on power-up; output does not conduct during this time.

Cutoff Point Tolerance
Fixed-Field Only: ± 5% of nominal cutoff distance
Indicators
2 LED indicators on sensor top:
Green ON steady: Power ON
Yellow ON steady: Light sensed
Yellow flashing: Marginal excess gain (1.0 to 1.5x excess gain)
Large, oval LED indicator on sensor back (except emitters):
Yellow ON steady: Normally open output is conducting
Construction
ABS housing, rated IEC IP67; NEMA 6; Acrylic lens cover
Connections
2 m (6.5') or 9 m (30') 5-wire PVC cable
Operating Conditions
Temperature: -20° to +70° C (-4° to +158° F)
Relative Humidity: 90% @ 50° C (non-condensing)
Certifications

Additional information on this product is immediately available online at www.bannerengineering.com/119166

View or download additional information, including excess gain curves, beam patterns and accessories.
For further assistance, contact a Banner Engineering Applications Engineer at (763) 544-3164 or (888) 373-6767.

BANNER®
more sensors, more solutions

WARRANTY: Banner Engineering Corp. warrants its products to be free from defects for one year. Banner Engineering Corp. will repair or replace, free of charge, any product of its manufacture found to be defective at the time it is returned to the factory during the warranty period. This warranty does not cover damage or liability for the improper application of Banner products. This warranty is in lieu of any other warranty either expressed or implied.

P/N 119168 rev. B