Technical Data **720109**

Effective July 2020
Supersedes October 2017

BUSSMANN SERIES

690 Volts gG/gL NH Fuse links



Product description

Eaton's Bussmann® series 690 V a.c. NH square bodied industrial fuse links are suitable for a wide variety of applications.

Standard features

- Reliable dual indicator system
- Low temperature rise
- Globally compliant
- Compatible with Eaton's Bussmann series NH fuse bases and NH fuse gear

Powering Business Worldwide

690 Volts gG/gL NH Fuse links

Catalogue symbol:

- (amp)NHG(size)B-690 with conducting metal gripping lugs
- (amp)NHG(size)BI-690 with insulated metal gripping lugs

Fuse size:

- 000 to 4*

Technical data:

- Rated voltage:
  - 690 V a.c.
  - 400 V d.c. size 1 160 A
  - 440 V d.c. size 1 200 A and 250 A
- Rated current: 2 to 800 A
- Breaking capacity:
  - 120 kA AC at 690 V a.c.
  - 50 kA at 400 V d.c. for size 1 160 A
  - 50 kA at 440 V d.c. for size 1 200 A and 250 A
- Operating frequency: 45-62 Hz
- Class of operation: gG/gL

Standards/Approvals:

- IEC 60269
- VDE 0636
- DIN 43620

Optional microswitches:

NH Fuse body size	Suitable microswitch
Size 000	170H0236
Size 00	170H0236
Size 1	170H0236
SIze 2	170H0235 or 170H0236
Size 3	170H0235
Size 4	Not available

Compatible fuse holders and fuse gear (ordered separately)

Description	Type	Data sheet number
Fuse bases 1-pole	DIN-Rail mounting SD-D	10163
	Screw mounting SD-S	10163
Fuse bases 3-pole	DIN-Rail mounting TD-D	10163
Fuse bases accessories	IP20, Shroud and phase barriers kits	10163
Fuse rails	Vertical - EBF	10240
Fuse switch disconnectors	Vertical - EBV	10275
	Horizontal - EBH Size 000	10292
	Horizontal - EBH Size 00 to 4	10293

Packaging:

- Sizes 000 to 3: 3 per carton
- Size 4: 1 per carton

Table 1. Catalogue numbers

Size	Rated current (Amps)	Rated voltage (V a.c.)	Rated voltage (V d.c.)	Breaking capacity	gG/gL dual indicator		Pack quantity
					Voltage conducting metal gripping lugs	Insulated metal gripping lugs	
000	2	690	N/A	120 kA	2NHG000B-690	N/A	3
000	4	690	N/A	120 kA	4NHG000B-690	N/A	3
000	6	690	N/A	120 kA	6NHG000B-690	N/A	3
000	10	690	N/A	120 kA	10NHG000B-690	10NHG000BI-690	3
000	16	690	N/A	120 kA	16NHG000B-690	16NHG000BI-690	3
000	20	690	N/A	120 kA	20NHG000B-690	20NHG000BI-690	3
000	25	690	N/A	120 kA	25NHG000B-690	25NHG000BI-690	3
000	32	690	N/A	120 kA	32NHG000B-690	32NHG000BI-690	3
000	35	690	N/A	120 kA	35NHG000B-690	35NHG000BI-690	3
000	40	690	N/A	120 kA	40NHG000B-690	40NHG000BI-690	3
000	50	690	N/A	120 kA	50NHG000B-690	50NHG000BI-690	3
000	63	690	N/A	120 kA	63NHG000B-690	63NHG000BI-690	3
00	16	690	N/A	120 kA	16NHG00B-690	-	3
00	20	690	N/A	120 kA	20NHG00B-690	-	3
00	25	690	N/A	120 kA	25NHG00B-690	-	3
00	32	690	N/A	120 kA	32NHG00B-690	-	3
00	35	690	N/A	120 kA	35NHG00B-690	-	3
00	40	690	N/A	120 kA	40NHG00B-690	-	3
00	50	690	N/A	120 kA	50NHG00B-690	50NHG00BI-690	3
00	63	690	N/A	120 kA	63NHG00B-690	63NHG00BI-690	3
00	80	690	N/A	120 kA	80NHG00B-690	80NHG00BI-690	3
00	100	690	N/A	120 kA	100NHG00B-690	100NHG00BI-690	3
00	125	690	N/A	120 kA	125NHG00B-690	125NHG00BI-690	3
00	160	660	N/A	120 kA	160NHG00B-660	-	3
1	50	690	N/A	120 kA	50NHG1B-690	50NHG1BI-690	3
1	63	690	N/A	120 kA	63NHG1B-690	63NHG1BI-690	3
1	80	690	N/A	120 kA	80NHG1B-690	80NHG1BI-690	3
1	100	690	N/A	120 kA	100NHG1B-690	100NHG1BI-690	3
1	125	690	N/A	120 kA	125NHG1B-690	125NHG1BI-690	3
1	160	690	400*	120 kA at 690 V a.c., 50 kA at 400 V d.c.*	160NHG1B-690	160NHG1BI-690	3
1	200	690	440*	120 kA at 690 V a.c., 50 kA at 440 V d.c.*	200NHG1B-690	200NHG1BI-690	3
1	224	690	N/A	120 kA	224NHG1B-690	224NHG1BI-690	3
1	250	690	440*	120 kA at 690 V a.c., 50 kA at 440 V d.c.*	250NHG1B-690	250NHG1BI-690	3
2	200	690	N/A	120 kA	200NHG2B-690	200NHG2BI-690	3
2	224	690	N/A	120 kA	224NHG2B-690	224NHG2BI-690	3
2	250	690	N/A	120 kA	250NHG2B-690	250NHG2BI-690	3
2	315	690	N/A	120 kA	315NHG2B-690	315NHG2BI-690	3
3	250	690	N/A	120 kA	250NHG3B-690	-	3
3	315	690	N/A	120 kA	315NHG3B-690	-	3
3	355	690	N/A	120 kA	355NHG3B-690	-	3
3	400	690	N/A	120 kA	400NHG3B-690	-	3
3	425	690	N/A	120 kA	425NHG3B-690	-	3
3	500	690	N/A	120 kA	500NHG3B-690	-	3
4	630	690	N/A	120 kA	630NHG4B-690	-	1
4	800	690	N/A	120 kA	800NHG4B-690	-	1

* The V d.c. rating is only for the voltage metal gripping lugs option

Dimensions - size 000 - mm

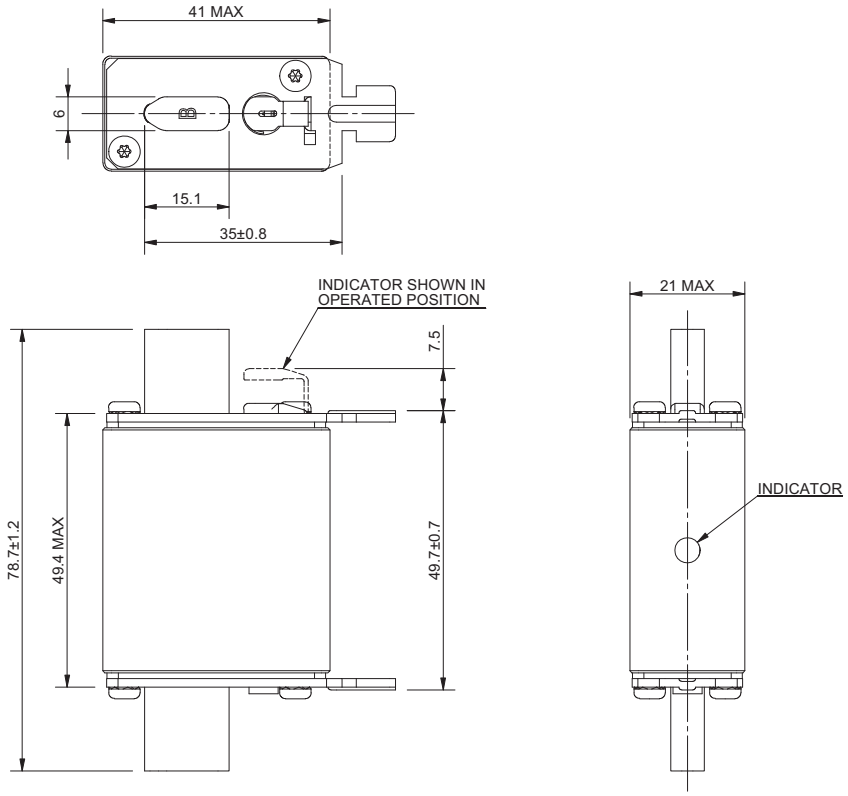

Dimensions - size 00 - mm

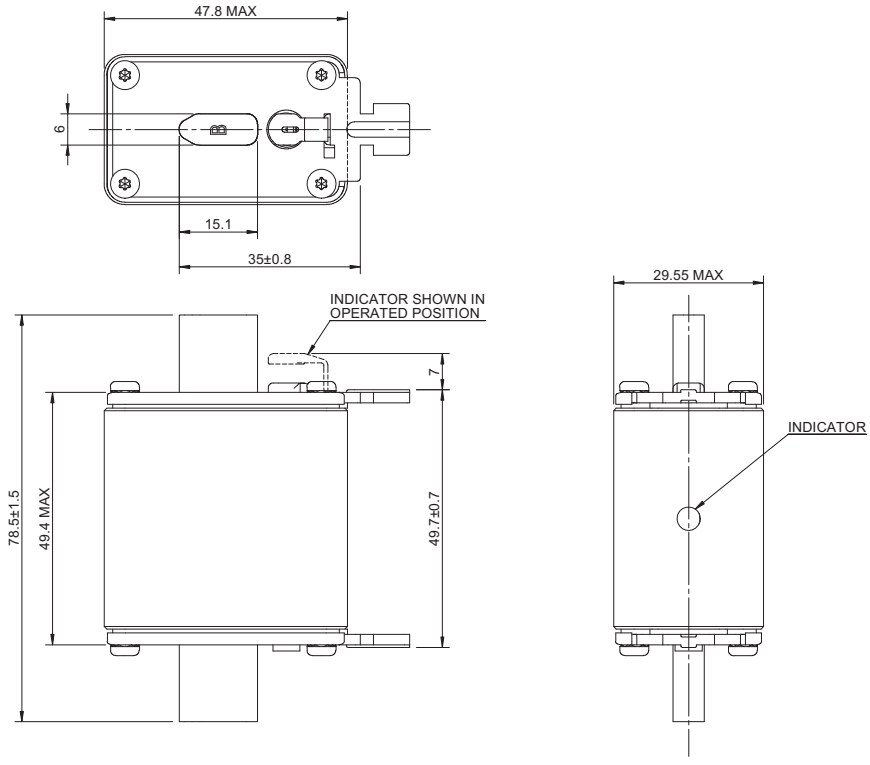

Dimensions - size 1 - mm

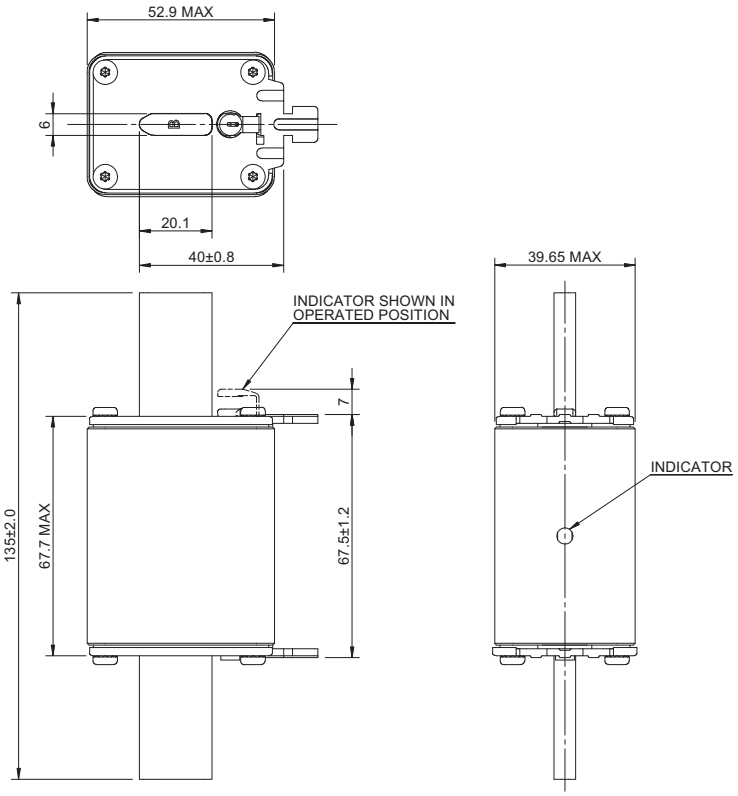

Dimensions - size 2 - mm

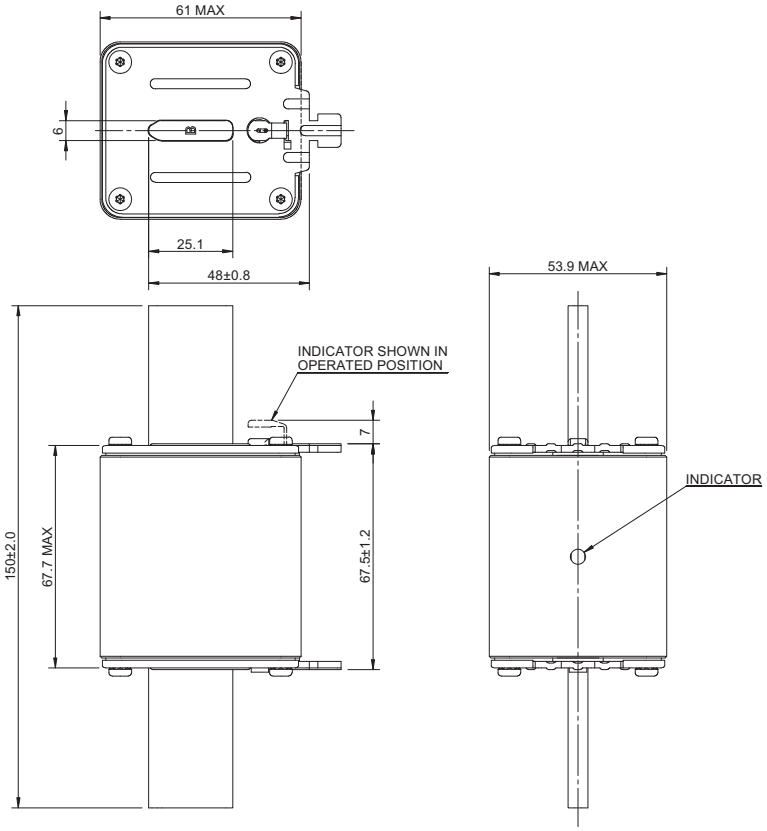

Dimensions - size 3 - mm

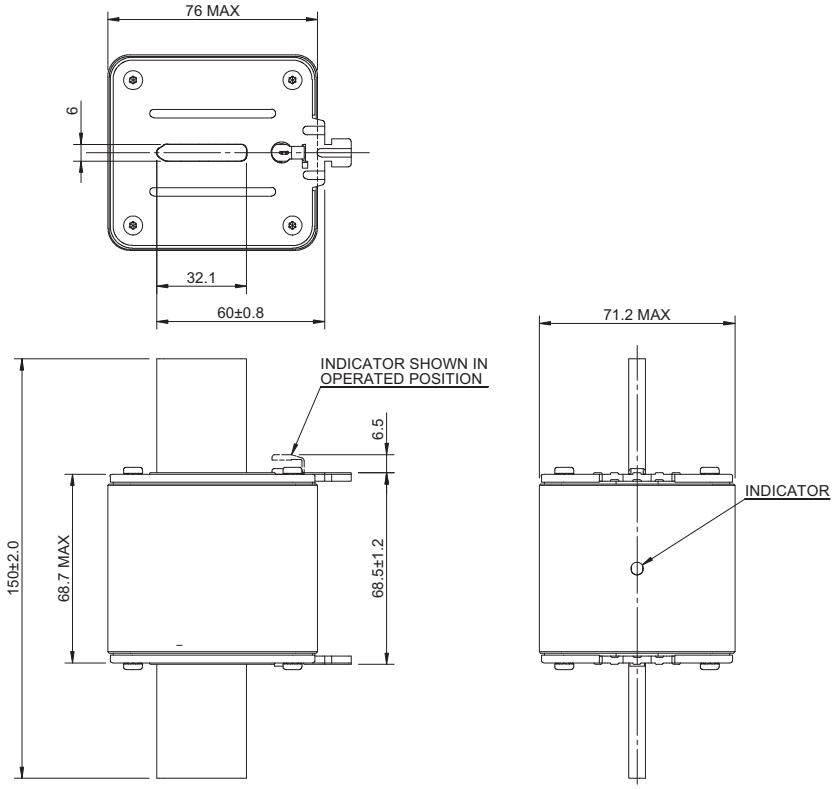

Dimensions - size 4 - mm

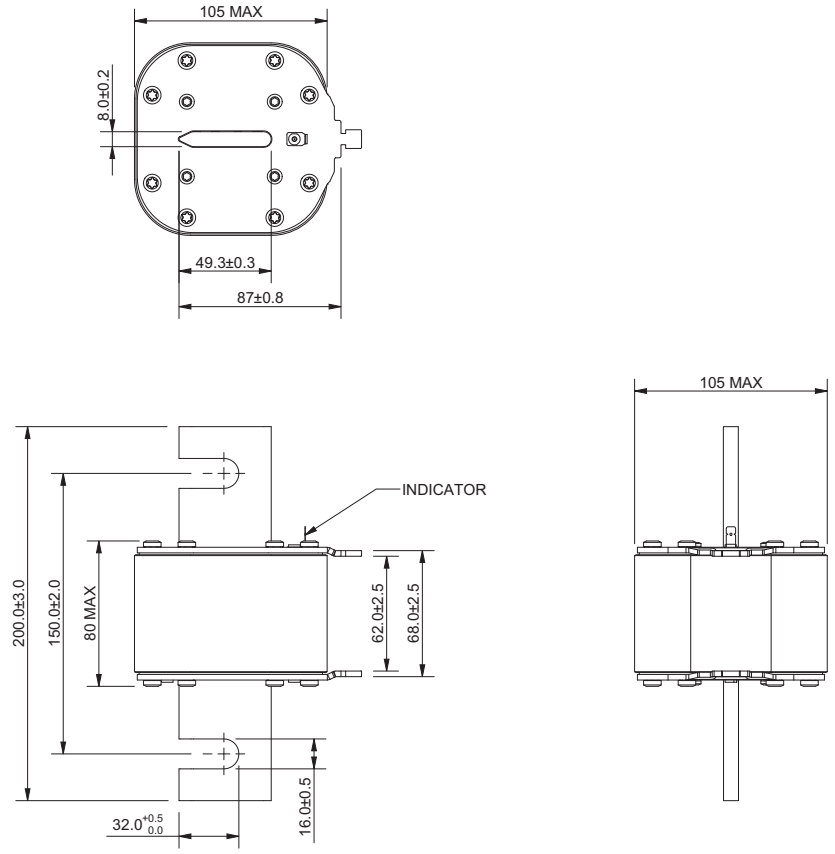

690 Volts gG/gL NH Fuse links

Time-current curves - NH Size 000

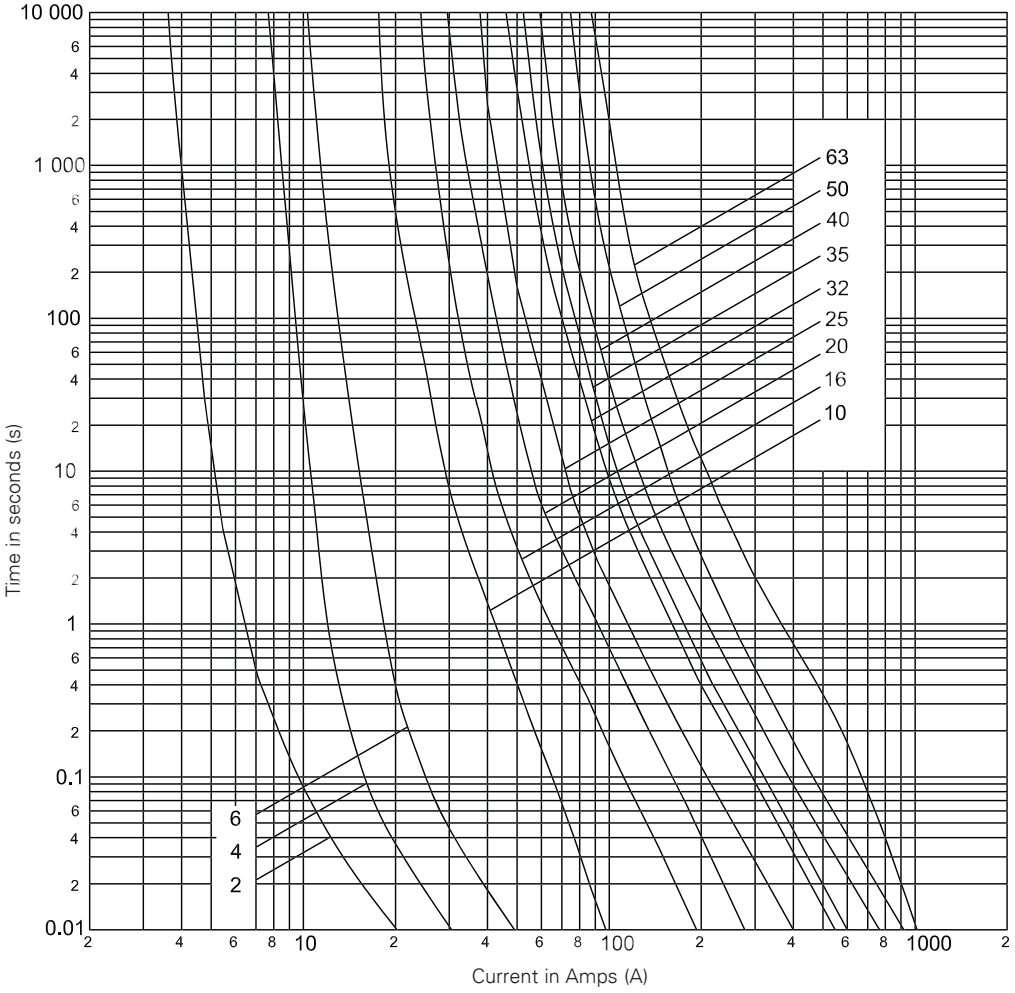

Technical data - NH size 000

Catalogue numbers with metal gripping lugs	Catalogue numbers with-insulated metal gripping lugs	Fuse link size	Rated current (Amps)	Rated voltage (V a.c.)	I^2t (Amps^2 Seconds)		Watts loss	Net weight per fuse (kg)
					Minimum pre-arcing	*I_1 120kA at 690 V a.c.		
2NHG000B-690	-	000	2	690	3.5	8	4	0.118
4NHG000B-690	-	000	4	690	6	16	2	0.118
6NHG000B-690	-	000	6	690	14	25	2	0.118
10NHG000B-690	10NHG000BI-690	000	10	690	60	400	1.5	0.118
16NHG000B-690	16NHG000BI-690	000	16	690	240	1200	2.5	0.118
20NHG000B-690	20NHG000BI-690	000	20	690	500	2500	2.5	0.118
25NHG000B-690	25NHG000BI-690	000	25	690	920	4400	3.5	0.118
32NHG000B-690	32NHG000BI-690	000	32	690	1800	9600	3.5	0.118
35NHG000B-690	35NHG000BI-690	000	35	690	2800	15,000	4	0.118
40NHG000B-690	40NHG000BI-690	000	40	690	3300	15,000	4	0.118
50NHG000B-690	50NHG000BI-690	000	50	690	6100	26,500	5.5	0.118
63NHG000B-690	63NHG000BI-690	000	63	690	6500	30,500	5.5	0.118

*I_1 is the maximum breaking capacity test at rated voltage according to IEC 60269 requirements

Time-current curves - NH Size 00 16 to 35 Amps

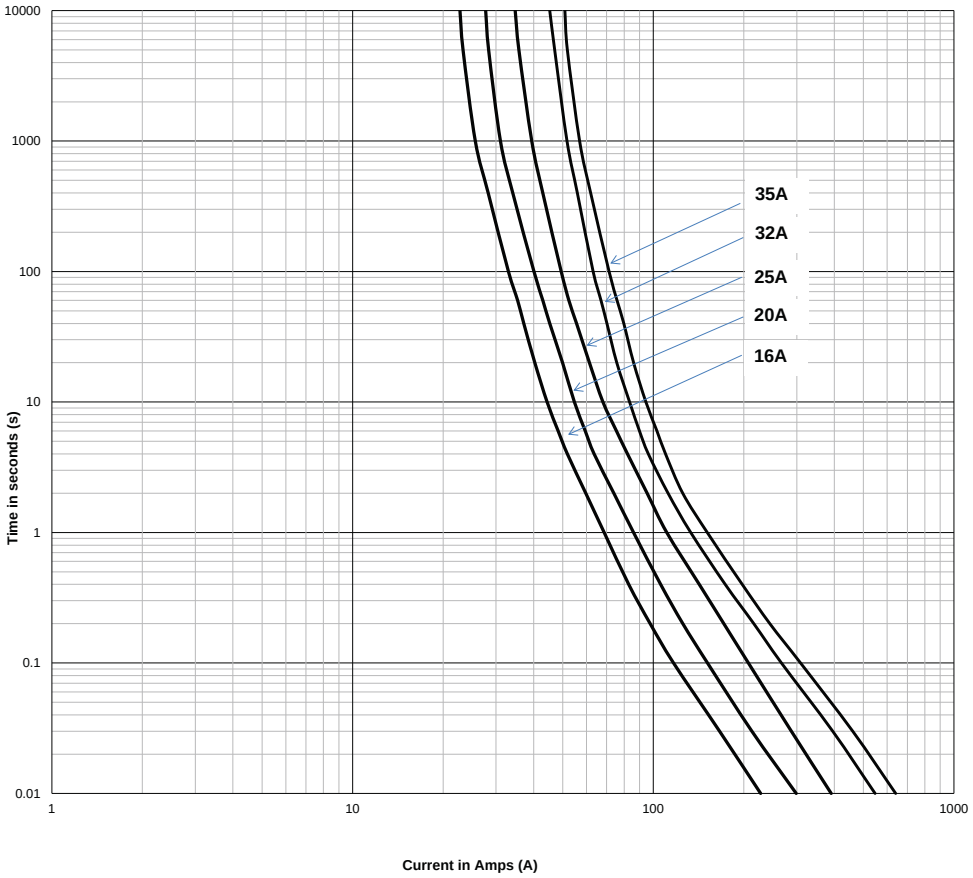

Technical data - NH size 00

Catalogue numbers with metal gripping lugs	Fuse link size	Rated current (Amps)	Rated voltage (V a.c.)	I^2t (Amps² Seconds) Minimum pre-arcing	I^2t (Amps² Seconds) *I_1 120kA at 690 V a.c.	Watts loss	Net weight per fuse (kg)
16NHG00B-690	00	16	690	200	800	2.2	0.182
20NHG00B-690	00	20	690	425	1690	2.5	0.182
25NHG00B-690	00	25	690	870	3460	3	0.182
32NHG00B-690	00	32	690	1700	6750	3.5	0.182
35NHG00B-690	00	35	690	2100	8340	4	0.182

*I_1 is the maximum breaking capacity test at rated voltage according to IEC 60269 requirements

690 Volts gG/gL NH Fuse links

Time-current curves - NH Size 00 40 to 160 Amps

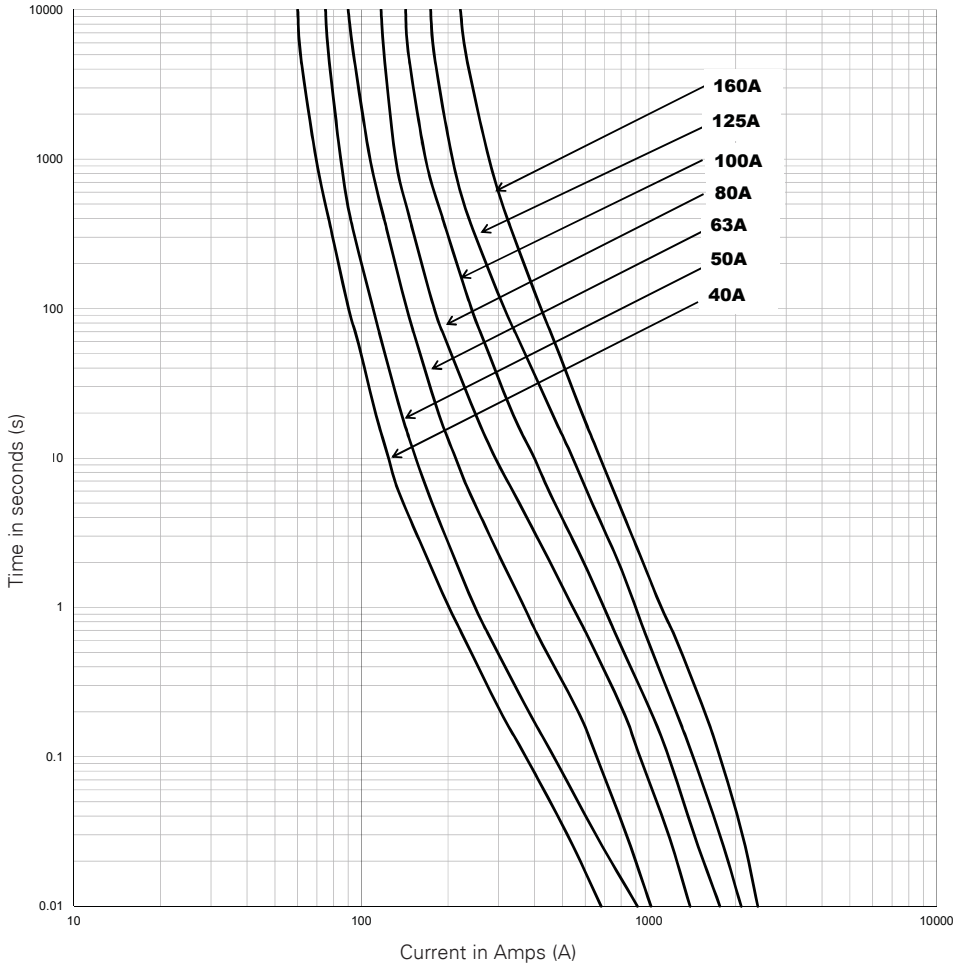

Technical data - NH size 00

Catalogue numbers with metal gripping lugs	Catalogue numbers with insulated metal gripping lugs	Fuse link size	Rated current (Amps)	Rated voltage (V a.c.)	I^2t (Amps² Seconds) Minimum pre-arcing	I^2t (Amps² Seconds) *I_1 120kA at 690 V a.c.	Watts loss	Net weight per fuse (kg)
40NHG00B-690	-	00	40	690	3240	19,438	3.9	0.182
50NHG00B-690	50NHG00BI-690	00	50	690	5800	35,000	5	0.182
63NHG00B-690	63NHG00BI-690	00	63	690	5800	43,000	5	0.182
80NHG00B-690	80NHG00BI-690	00	80	690	11,000	54,500	7	0.182
100NHG00B-690	100NHG00BI-690	00	100	690	19,000	92,000	7.5	0.182
125NHG00B-690	125NHG00BI-690	00	125	690	27,500	105,000	9.5	0.182
160NHG00B-660	-	00	160	660	40,500	135,000	13	0.182

*I_1 is the maximum breaking capacity test at rated voltage according to IEC 60269 requirements

690 Volts gG/gL NH Fuse links

Time-current curves - NH Size 1

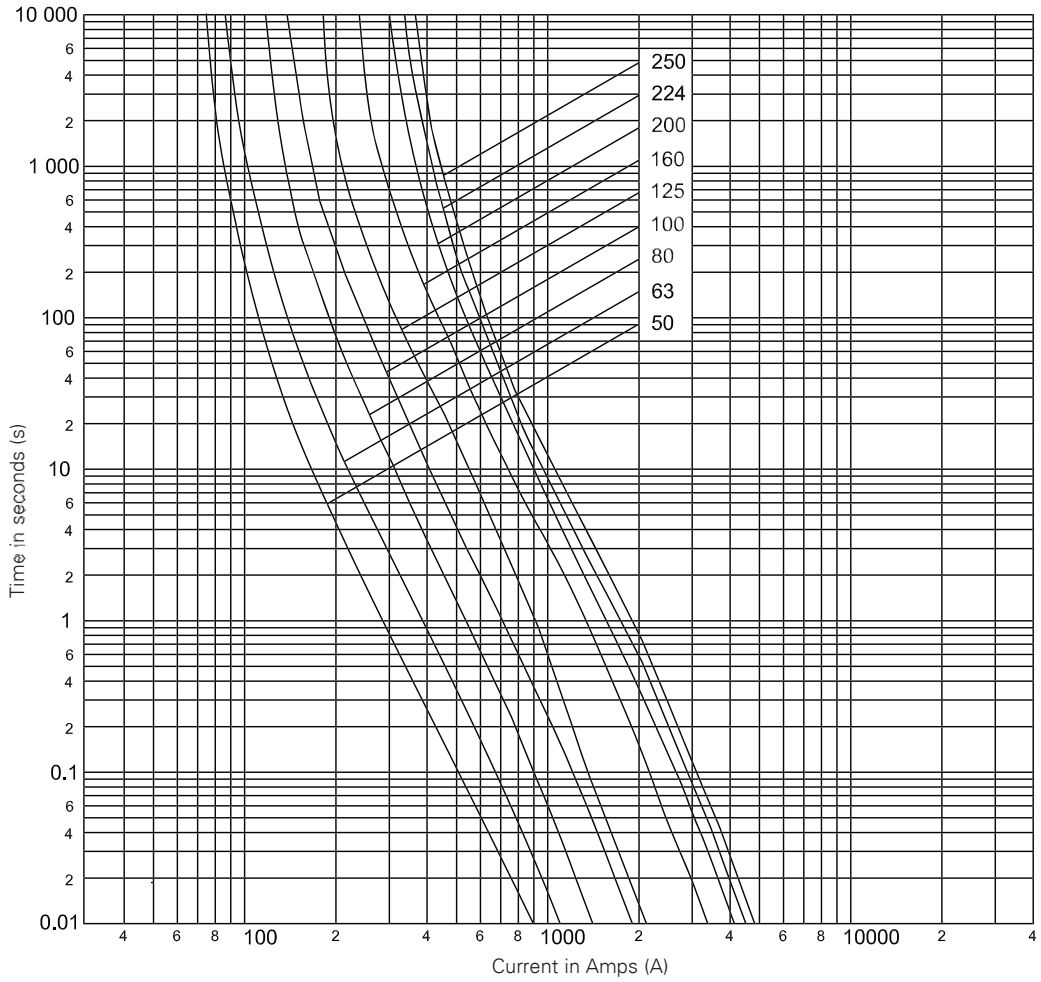

Technical data - NH size 1

Catalogue numbers with metal gripping lugs	Catalogue numbers with insulated metal gripping lugs	Fuse link size	Rated current (Amps)	Rated voltage (V a.c.)	Rated voltage (V d.c.)	I^2t (Amps² Seconds)		Watts loss	Net weight per fuse (kg)
						Minimum pre-arcing	**I_1 120kA at 690 V a.c.		
50NHG1B-690	50NHG1BI-690	1	50	690	N/A	6350	26,500	6.4	0.38
63NHG1B-690	63NHG1BI-690	1	63	690	N/A	6800	36,000	5.6	0.38
80NHG1B-690	80NHG1BI-690	1	80	690	N/A	10,500	47,500	7.7	0.38
100NHG1B-690	100NHG1BI-690	1	100	690	N/A	22,000	105,000	8.2	0.38
125NHG1B-690	125NHG1BI-690	1	125	690	N/A	29,000	120,000	13	0.38
160NHG1B-690	160NHG1BI-690	1	160	690	400*	71,000	240,000	13	0.38
200NHG1B-690	200NHG1BI-690	1	200	690	440*	105,000	350,000	17	0.38
224NHG1B-690	224NHG1BI-690	1	224	690	N/A	120,000	430,000	19	0.38
250NHG1B-690	250NHG1BI-690	1	250	690	440*	150,000	520,000	22	0.38

* The V d.c. rated voltage is for the metal gripping lugs versions only

**I_1 is the maximum breaking capacity test at rated voltage according to IEC 60269 requirements

Time-current curves - NH Size 2

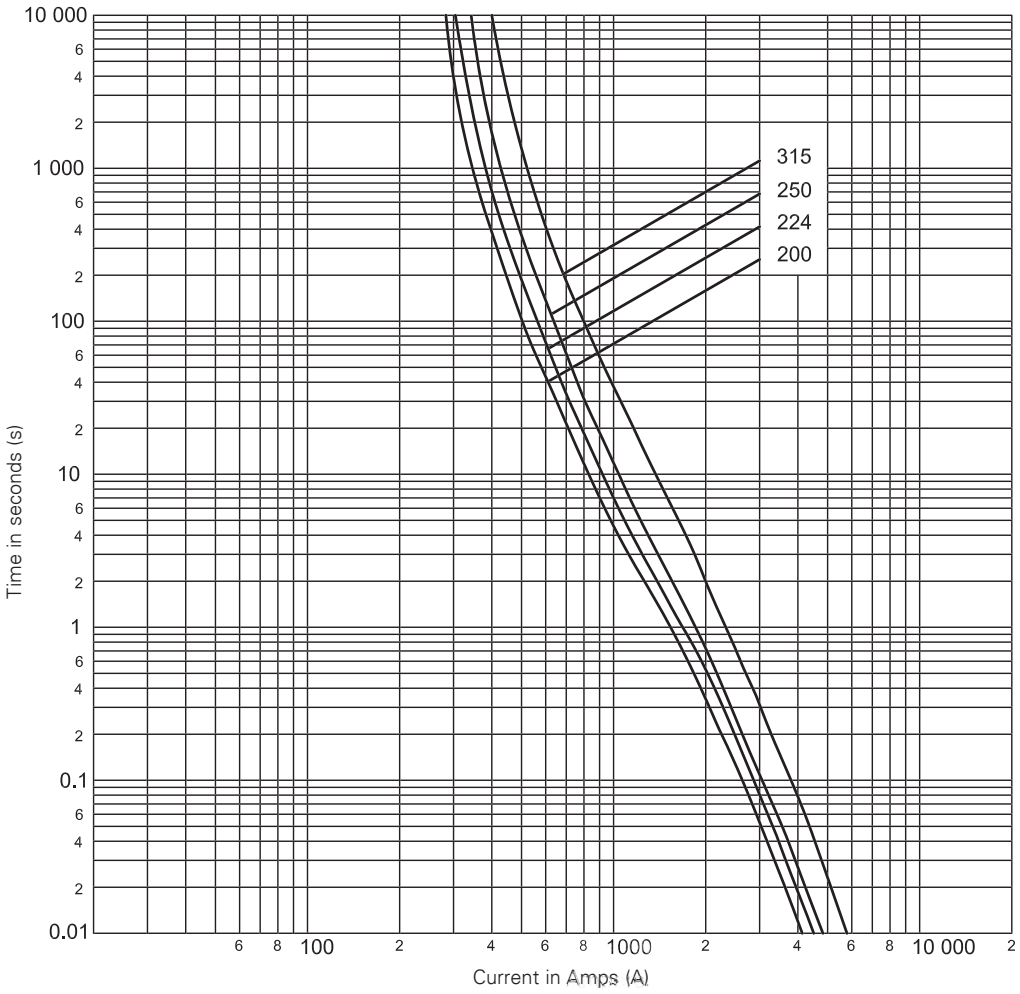

Technical data - NH size 2

Catalogue numbers with metal gripping lugs	Catalogue numbers with insulated metal gripping lugs	Fuse link size	Rated current (Amps)	Rated voltage (V a.c.)	I^2t (Amps² Seconds) Minimum pre-arcing	I^2t (Amps² Seconds) *I_1 120kA at 690 V a.c.	Watts loss	Net weight per fuse (kg)
200NHG2B-690	200NHG2BI-690	2	200	690	99,000	385,000	18	0.62
224NHG2B-690	224NHG2BI-690	2	224	690	130,000	485,000	20	0.62
250NHG2B-690	250NHG2BI-690	2	250	690	170,000	625,000	23	0.62
315NHG2B-690	315NHG2BI-690	2	315	690	295,000	760,000	32	0.62

*I_1 is the maximum breaking capacity test at rated voltage according to IEC 60269 requirements

690 Volts gG/gL NH Fuse links

Time-current curves - NH Size 3

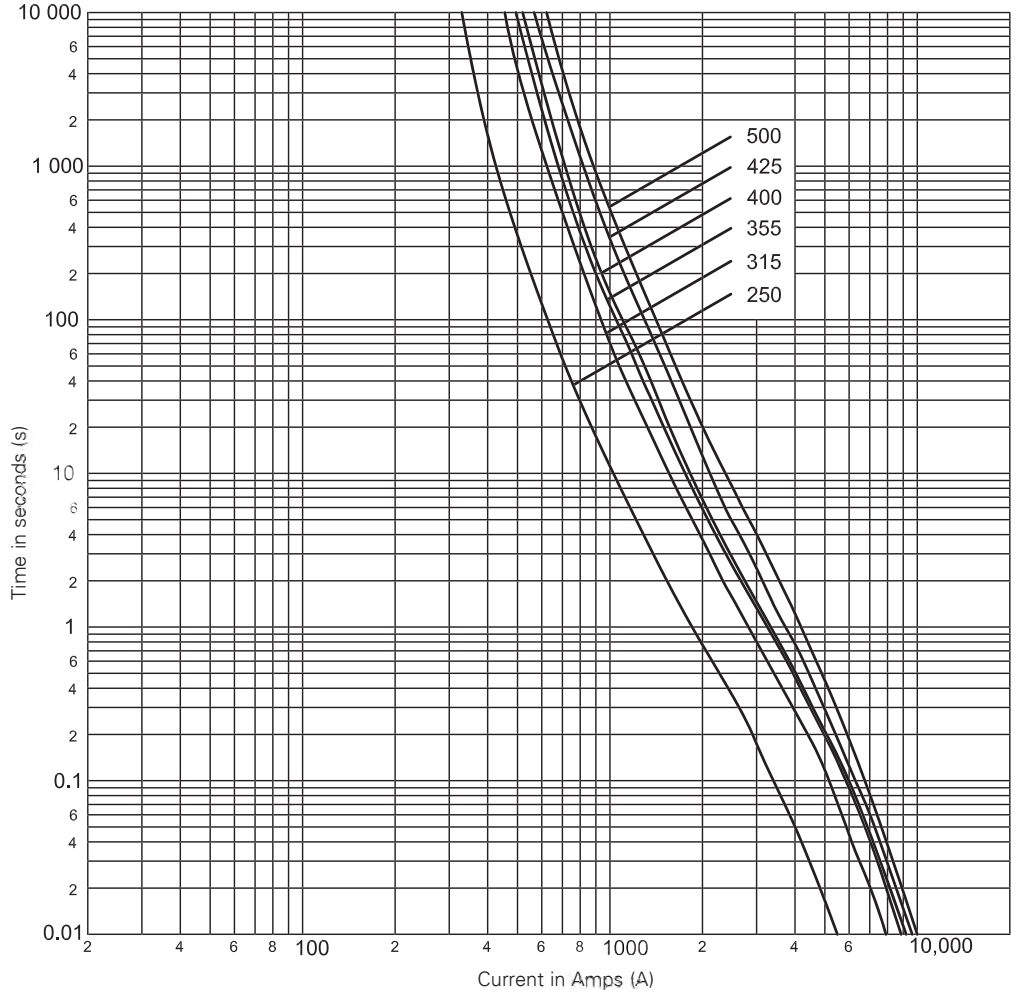

Technical data - NH size 3

Catalogue numbers with metal gripping lugs	Fuse link size	Rated current (Amps)	Rated voltage (V a.c.)	I^2t (Amps^2 Seconds) Minimum pre-arcing	I^2t (Amps^2 Seconds) *I_1 120kA at 690 V a.c.	Watts loss	Net weight per fuse (kg)
250NHG3B-690	3	250	690	160,000	715,000	21	0.38
315NHG3B-690	3	315	690	375,000	1,400,000	22	0.38
355NHG3B-690	3	355	690	400,000	1,650,000	25	0.38
400NHG3B-690	3	400	690	475,000	1,600,000	37	0.38
425NHG3B-690	3	425	690	630,000	1,700,000	35	0.38
500NHG3B-690	3	500	690	856,000	2,480,000	43	0.38

*I_1 is the maximum breaking capacity test at rated voltage according to IEC 60269 requirements

690 Volts gG/gL NH Fuse links

Time-current curves - NH Size 4 Single indication slotted tags

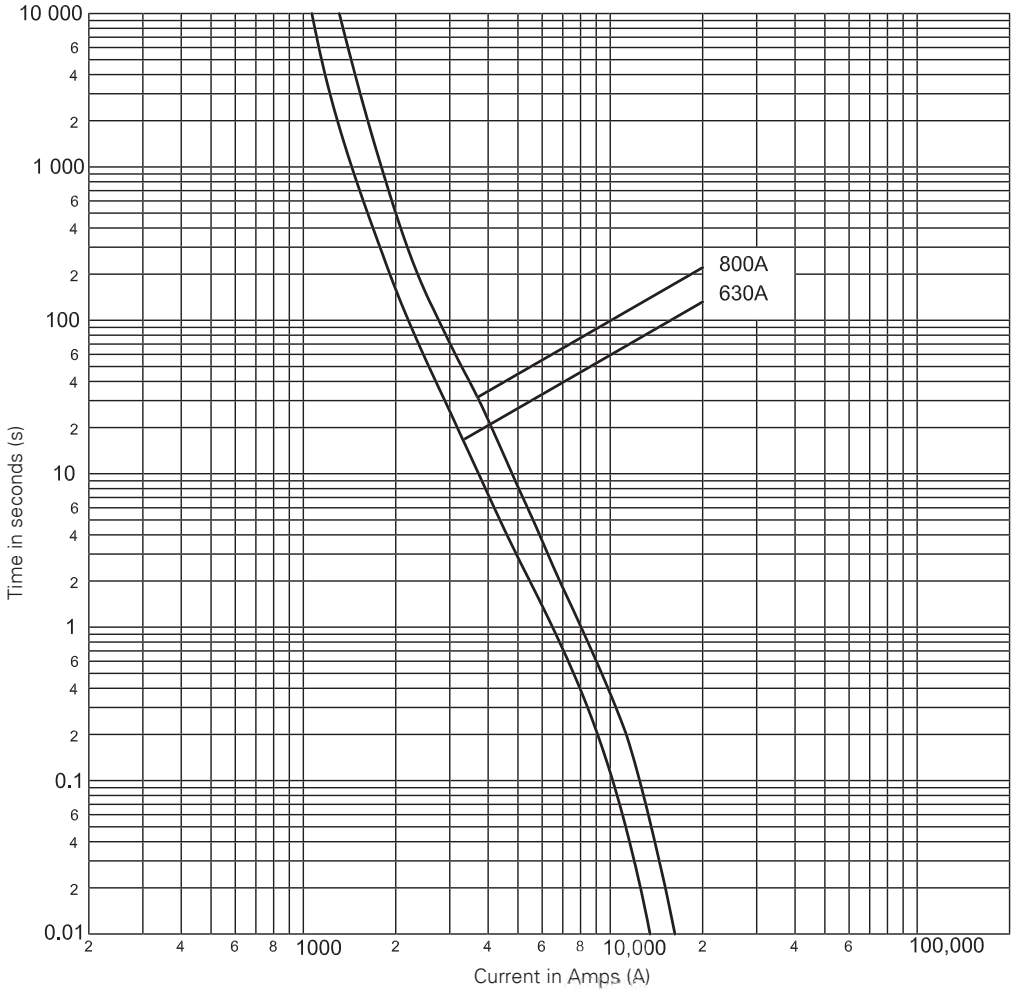

Technical data - NH size 4

Catalogue numbers with metal gripping lugs	Fuse link size	Rated current (Amps)	Rated voltage (V a.c.)	I^2t (Amps² Seconds) Minimum pre-arcing	I^2t (Amps² Seconds) *I_1 120kA at 690 V a.c.	Watts loss	Net weight per fuse (kg)
630NHG4B-690	4	630	690	1,730,000	6,550,000	44	2.5
800NHG4B-690	4	800	690	3,330,000	11,000,000	61	2.5

*I_1 is the maximum breaking capacity test at rated voltage according to IEC 60269 requirements

Changes to the products, to the information contained in this document, and to prices are reserved; so are errors and omissions. Only order confirmations and technical documentation by Eaton is binding. Photos and pictures also do not warrant a specific layout or functionality. Their use in whatever form is subject to prior approval by Eaton. The same applies to Trademarks (especially Eaton, Moeller, and Cutler-Hammer). The Terms and Conditions of Eaton apply, as referenced on Eaton Internet pages and Eaton order confirmations.

Eaton
EMEA Headquarters
Route de la Longeraie 7
1110 Morges, Switzerland

Eaton Electrical Products Limited
Unit 1, Hawker Business Park
Melton Road
Burton-on-the-Wolds
Leicestershire, LE12 5TH
United Kingdom

© 2020 Eaton
All Rights Reserved
PDF Only
Publication No. 720109
July 2020

Powering Business Worldwide

Eaton is a registered trademark.

All other trademarks are property of their respective owners.