PN7094

PN-010-RER14-QFRKG/US/ /V

Pressure sensors

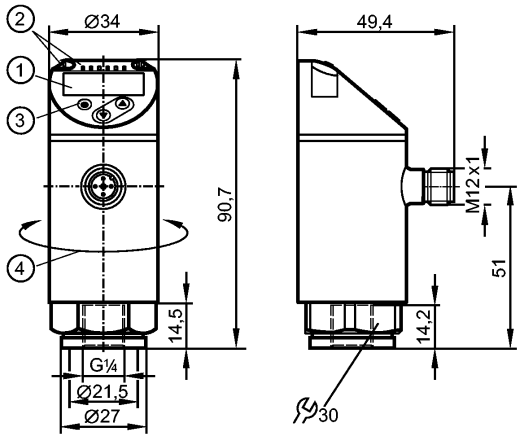

1: 4-digit alphanumeric display / alternating indication of red and green
2: LEDs (display unit / switching status)
3: Programming button
4: Upper part of the housing can be rotated by 345°

Product characteristics			
Electronic pressure monitor			
M12 connector			
Function programmable			
Measuring element: ceramic-capacitive pressure measuring cell			
Process connection: G ¼ I			
2 outputs OUT1 = switching output OUT2 = switching output			
4-digit alphanumeric display / alternating indication of red and green			
Measuring range: -1...10 bar / -14.5...145 psi / -0.1...1.0 MPa			
Application			
Application	Type of pressure: relative pressure liquids and gases of the fluid group 2 according to Article 9 of the Pressure Equipment Directive (PED) For gas applications > 25 bar: select PN7x7x series		
Pressure rating	75 bar	1087 psi	7.5 MPa
Bursting pressure min.	150 bar	2175 psi	15 MPa
Medium temperature [°C]	-25...80		
Electrical data			
Electrical design	DC PNP/NPN		
Operating voltage [V]	18...30 DC [1])		
Current consumption [mA]	< 35		
Insulation resistance [MΩ]	> 100 (500 V DC)		
Protection class	III		
Reverse polarity protection	yes		
Outputs			
Output	2 outputs OUT1 = switching output OUT2 = switching output		
Output function	2 x normally open / closed programmable		

PN7094

PN-010-RER14-QFRKG/US/ /V

Pressure sensors

Current rating	[mA]	150; 200 (...60 °C); 250 (...40 °C)		
Voltage drop	[V]	< 2.5		
Short-circuit protection		pulsed		
Overload protection		yes		
Switching frequency	[Hz]	≤ 170		
Measuring / setting range				
Measuring range		-1...10 bar	-14.5...145 psi	-0.1...1.0 MPa
Setting range				
Set point, SP		-0.90...10 bar	-13.5...145 psi	-0.09...1 MPa
Reset point, rP		-0.95...9.95 bar	-14...144.5 psi	-0.095...0.995 MPa
in steps of		0.05 bar	0.5 psi	0.005 MPa
Accuracy / deviations				
Accuracy / deviations (in % of the span)				
Switch point accuracy		< ± 0.5		
Characteristics deviation *)		< ± 0.25 (BFSL) / < ± 0.5 (LS)		
Hysteresis		< ± 0.25		
Repeatability **)		< ± 0.1		
Long-term stability ***)		< ± 0.05		
Temperature coefficients (TEMPCO) in the temperature range -25...80° C (in % of the span per 10 K)				
Greatest TEMPCO of the zero point		0.2		
Greatest TEMPCO of the span		0.2		
Reaction times				
Power-on delay time	[s]	< 0.3		
Min. response time switching output	[ms]	< 3		
Delay time programmable dS, dr	[s]	0...50		
Integrated watchdog		yes		
Software / programming				
Programming options		hysteresis / window function; NO / NC; output polarity; on delay, off delay; damping; display unit		
Interfaces				
IO-Link device				
Transfer type		COM2 (38.4 kBaud)		
IO-Link revision		1.1		
SDCI standard		IEC 61131-9		
IO-Link device ID		403 d / 00 01 93 h		
Profiles		Smart Sensor: Process Data Variable; Device Identification, Device Diagnosis		
SIO mode		yes		
Required master port class		A		
Process data analogue		1		
Process data binary		2		
Min. process cycle time	[ms]	2.3		
Environment				
Ambient temperature	[°C]	-25...80		
Storage temperature	[°C]	-40...100		

PN7094

PN-010-RER14-QFRKG/US/ /V

Pressure sensors

Protection		IP 65 / IP 67
Tests / approvals		
Pressure equipment directive		Sound engineering practice
EMC		DIN EN 61000-6-2 DIN EN 61000-6-3
Shock resistance		DIN EN 60068-2-27 50 g (11 ms)
Vibration resistance		DIN EN 60068-2-6 20 g (10...2000 Hz)
MTTF	[Years]	224.01
UL approval number		J001
Mechanical data		
Process connection		G ¼ I
Materials (wetted parts)		1.4404; ceramics; FKM
Housing materials		1.4404; PBT+PC-GF 30; PBT-GF 20; PC
Switching cycles min.		100 million
Tightening torque	[Nm]	25...35 (recommended tightening torque²)
Weight	[kg]	0.234
Displays / operating elements		
Display		Display unit 3 x LED green (bar, psi, MPa) Switching status 2 x LED yellow 4-digit alphanumeric display / alternating indication Measured values of red and green
Electrical connection		
Connection		M12 connector; Gold-plated contacts

Wiring

Core colours

BK black
BN brown
BU blue
WH white



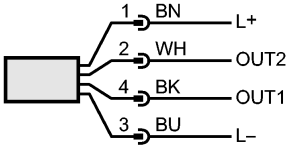

OUT1: switching output or IO-Link
OUT2: switching output
Colours to DIN EN 60947-5-2

Remarks

Remarks

¹) to EN50178, SELV, PELV
*) BFSL = Best Fit Straight Line / LS = Limit Value Setting
**) with temperature fluctuations < 10 K
***) in% of the span / 6 months
²) Depends on lubrication, seal and pressure rating

Pack quantity	[piece]	1