Permanent Light 826 / Accessories

# Wire guard SR



| Part No.: | 975.826.03 |
|---|---|

| MECHANICAL DATA | |
|---|---|
| Height | 163 mm |
| Diameter | 146 mm |
| Materials | Steel |
| Housing colour | Silver |
| Weight with packaging | 136 g |
| Product weight | 136 g |

| APPROVAL DATA | |
|---|---|
| WEEE | No |
| Conforms with RED directive | No |
| Conforms with ATEX-directive | No |
| Conforms with CCC | No |
| Conforms with UL | No |
| Conforms with FCC | No |
| Conforms with IC | No |
| EAC certificate available | No |
| Conforms with AS-I | No |
| ICAO Certification | No |
| Conforms with DNV | No |
| Conforms with RoHS CN | No |

! For additional installation and mounting information, refer to the appropriate user guide at www.werma.com. This printed copy is for information only and is subject to alteration.

Permanent Light 826 / Accessories

# Wire guard SR

**DRAWING**

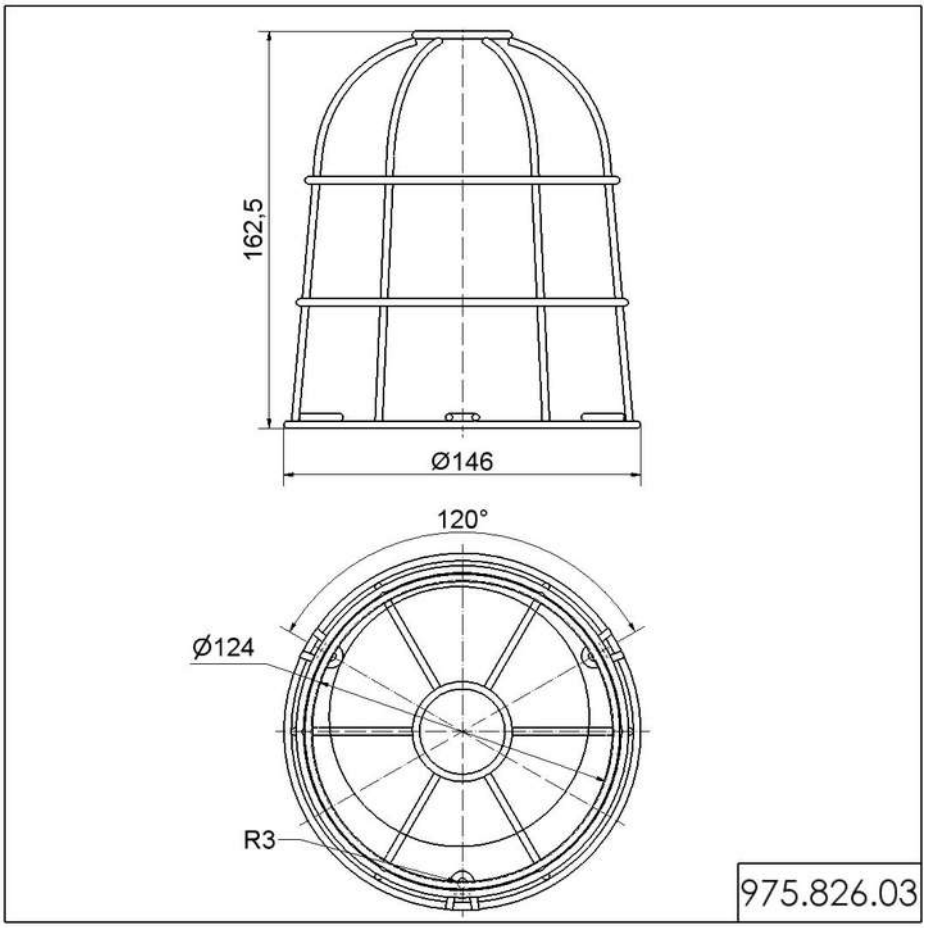


! For additional installation and mounting information, refer to the appropriate user guide at www.werma.com. This printed copy is for information only and is subject to alteration.