PRESSURE COMPENSATION DEVICE

DA 084 | IP55



Photo: Inside view

> High degree of protection **> Easy to install**

It has become more and more important to provide a protected enclosure environment for valuable and crucial electrical and electronic components. In a tightly closed enclosure, pressure differentials can occur during extreme temperature variations. The specially designed pressure compensation device DA 084 permits a controlled change in pressure and avoids the enterring of dust and water. The pressure compensation device is suitable for the use in enclosures and housings in accordance with DIN EN 62208.

TECHNICAL DATA

Mounting	PG 29 thread with union nut
Torque	5 Nm
Material	plastic according to UL94 V-0, light grey weather proof and UV light resistant according to UL746C (f1)
Sealing	sealing gasket NBR
Air interface	approx. 1.5 cm^2
Dimensions	Ø 65.5 x 30.5 mm
Fitting position	vertical[1]
Operating/Storage temperature	-45 to +70 °C (-49 to +158 °F)
Approvals	EAC

[1] Protection type is restricted to IP54 if fitting position of DA 084 is not vertical.

Installation: Make cut-out Ø 37^{+1}mm in enclosure wall and mount pressure compensation device with nut. Please make sure that the sealing gasket is put in place on the outer side panel of the enclosure. For optimal pressure compensation we recommend to use two devices on opposite sides towards the top of the enclosure.

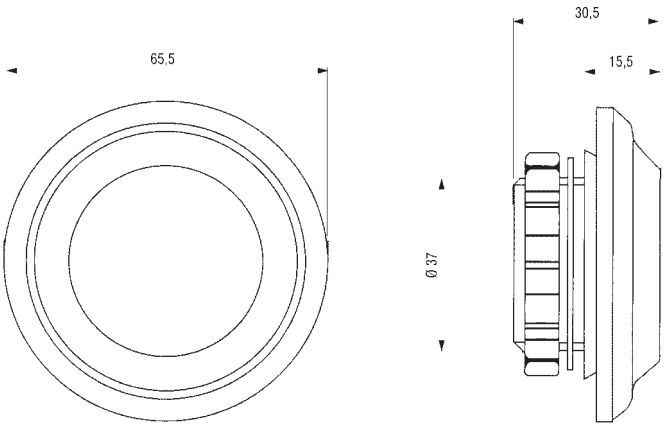

Art. No.	Protection type	1 packing unit	Weight (approx.)
08400.0-03	IP55	2 pieces	62 g (31 g / piece)

www.stego.de | www.stego.co.uk | www.stegonorden.se

04.04.2017 | Specifications are subject to change without notice. Errors and omissions excepted. Suitability of this product for its intended use and any associated risks must be determined by the end customer/buyer in its final application.