GMFL800C03

THREE-POLE DISCONNECT SWITCH WITH FUSE HOLDER (UL98). 800A. L UL FUSE TYPE. LEFT COMMAND POLE



Product designation			Switch disconnector with fuse
Product type designation			GM
Type of fuse			L
Number of poles		Nr.	3
Operating voltage type			AC
Contact characteristics			
IEC Conventional free air thermal current Ith ≤ 40°C		A	800
IEC Conventional free air thermal current Ith ≤ 65°C		A	640
Rated insulation voltage Ui IEC/EN		V	1000
Rated impulse withstand voltage Uimp		kV	12
Operating current Ie			
AC21A			
	400V	A	800
	500V	A	800
	690V	A	800
AC22A			
	400V	A	800
	500V	A	800
	690V	A	800
AC23A			
	400V	A	800
	500V	A	800
	690V	A	800
Power dissipation per pole max		W	75
Power dissipation per pole without fuse		W	75
Max fuse power dissipation			
	in open air	W	55
	in enclosure	W	55
Rated operational power AC23A			
	400V	kW	450
	690V	kW	710
Rated short time current (1s) Icw (rms)		kA	20
Short-circuit protection with fuse		Class/A	L/800
Making capacity AC23A 400V		A	8000
Breaking capacity AC23A 400V		A	6400
Mechanical life		cycles	3000
Electrical life AC21A		cycles	500 (AC23A 400V)
Mechanical features			
Operating position			
	normal		Vertical plan
	allowable		Any
Fixing			Screw

The characteristics described in this document are subject to updates or modifications at any time. The descriptions, technical and functional information, illustrations and instructions in this brochure are purely illustrative, and are consequently not contractually binding

GMFL800C03

THREE-POLE DISCONNECT SWITCH WITH FUSE HOLDER (UL98). 800A. L UL FUSE TYPE. LEFT COMMAND POLE

Terminals			
	type		Bar
Tightening torque for terminals			
	max	Nm	56.5
	max	Ibin	500
Tightening torque for fuse links bolts		Nm	40
Tightening torque for terminal lug		Nm	54
Conductor section			
	AWG/kcmil min		(2x) 2
Terminal kit lugs			GMX504
UL technical data			
UL Standard			UL98
General purpose current rating		A	800
Operating voltage max		V	600
Horsepower/FLA current three phase motor			
	240V	HP/A	250/602
	480V	HP/A	500/590
	600V	HP/A	600/472
Short circuit rating		kA rms	200
Short circuit rating with fuse		Class/A	L/800
Ambient conditions			
Operating temperature			
	min	°C	-25
	max	°C	55
Storage temperature			
	min	°C	-40
	max	°C	70
Max altitude		m	3000
Resistance & Protection			
Frontal IP degree			IP20
Pollution degree			3

Dimensions

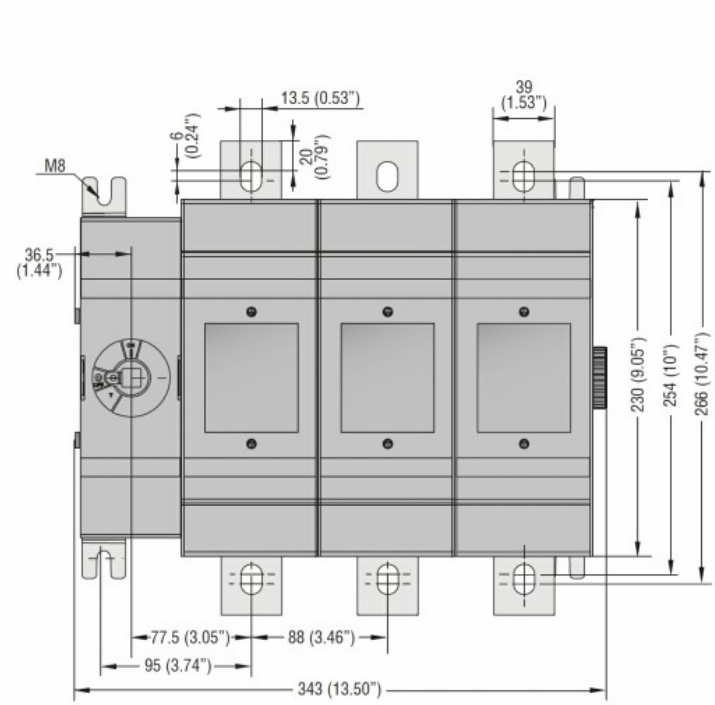

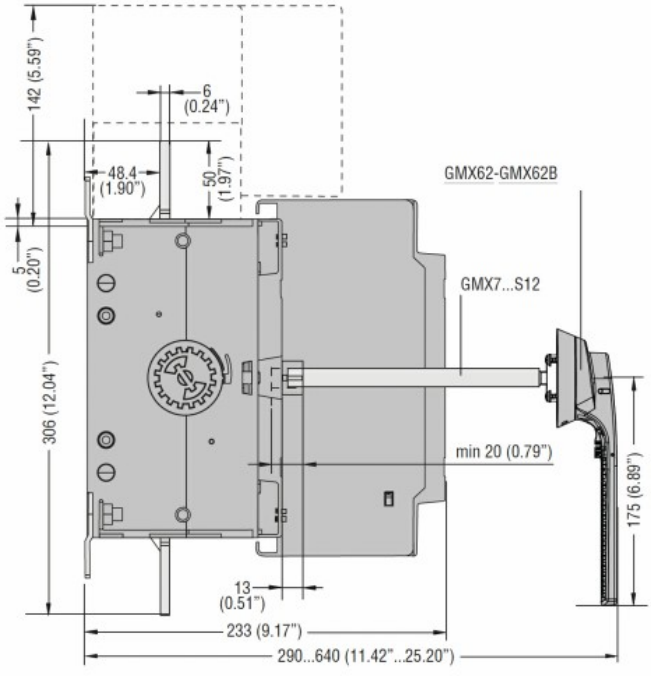

Wiring diagrams

The characteristics described in this document are subject to updates or modifications at any time. The descriptions, technical and functional information, illustrations and instructions in this brochure are purely illustrative, and are consequently not contractually binding

GMFL800C03

THREE-POLE DISCONNECT SWITCH WITH FUSE HOLDER (UL98). 800A. L UL FUSE TYPE. LEFT COMMAND POLE

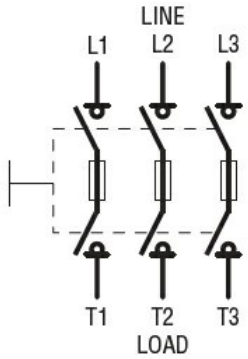

Certifications and compliance

Compliance

IEC/EN 60947-1
IEC/EN 60947-3

Certifications

CSA C22.2 n°4
cULus according to UL98
EAC

ETIM classification

ETIM 8.0	EC000216 - Switch disconnector

The characteristics described in this document are subject to updates or modifications at any time. The descriptions, technical and functional information, illustrations and instructions in this brochure are purely illustrative, and are consequently not contractually binding