Product data sheet
Characteristics

ZMLPA1P2SH
Electronic pressure sensors, Pressure sensors XM, Display & switch ZMLP, 24 VDC, 4...20 mA, PNP, hysteresis, M12



Main

Range of product	OsiSense XM
Product or component type	Electronic pressure sensors
Device short name	ZMLP

Complementary

Display range	-14.5...6000
[Us] rated supply voltage	24 V DC SELV (voltage limits: 17…33 V)
Current consumption	<= 50 mA
Electrical connection	Female connector M12, 2 pins Male connector M12, 4 pins
Type of output signal	Analogue + discrete
Analogue output function	4...20 mA
Discrete output type	Solid state PNP, NO/NC programmable
Switching function	Hysteresis
Maximum switching current	200 mA
Maximum voltage drop	2 V
Adjustable range of switching point on rising pressure	5…98 % of selected display range
Adjustable range of switching point on falling pressure	2…95 % of selected display range
Minimum differential travel	3 % of selected display range
Marking	CE
Front material	Polyester
Housing material	PBT Valox
Operating position	Any position
Protection type	Reverse polarity Overload protection Short-circuit protection Overvoltage protection
Response time on output	<= 3 ms for analog output <= 3 ms for discrete output
Display type	4 digits 7 segments
Local signalling	1 LED (yellow) for light ON when switch is actuated
Response time	300 ms
Maximum delay first up	100 ms
Accuracy	<= - 0.1 % of the measuring range
Measurement accuracy	<= 1 % of the measuring range
Display accuracy	<= 1 % of the measuring range
Mechanical durability	10000000 cycles
Depth	42 mm

The information provided in this documentation contains general descriptions and/or technical characteristics of the performance of the products contained herein.
This documentation is not intended as a substitute for and is not to be used for determining suitability or reliability of these products for specific user applications.
It is the duty of any such user or integrator to perform the appropriate and complete risk analysis, evaluation and testing of the products with respect to the relevant specific application or use thereof.
Neither Schneider Electric Industries SAS nor any of its affiliates or subsidiaries shall be responsible or liable for misuse of the information contained herein.

Height	77 mm
Width	41 mm
Net weight	0.103 kg
[Uimp] rated impulse withstand voltage	0.5 kV DC

Environment

Product certifications	EAC cULus
Standards	EN/IEC 61000-6-4 UL 508 EN/IEC 61000-6-2
Ambient air temperature for operation	-25…70 °C
Ambient air temperature for storage	-30…80 °C
IP degree of protection	IP67 conforming to EN/IEC 60529 IP65 conforming to EN/IEC 60529 IP69K conforming to DIN 40050
Vibration resistance	5 gn (f= 10…2000 Hz) conforming to EN/IEC 60068-2-6
Shock resistance	25 gn conforming to EN/IEC 60068-2-27
Electromagnetic compatibility	Immunity to conducted RF disturbances: 10 V 0.15...80 MHz conforming to EN/IEC 61000-4-6 Surge immunity test: 1 kV conforming to EN/IEC 61000-4-5 Electrical fast transient/burst immunity test: 2 kV conforming to EN/IEC 61000-4-4 Susceptibility to electromagnetic fields: 10 V/m 80...2000 MHz conforming to EN/IEC 61000-4-3 Electrostatic discharge immunity test: 8 kV air, 4 kV contact conforming to EN/IEC 61000-4-2

Packing Units

Unit Type of Package 1	PCE
Number of Units in Package 1	1
Package 1 Height	4.2 cm
Package 1 Width	4.6 cm
Package 1 Length	8.4 cm
Package 1 Weight	106 g
Unit Type of Package 2	S01
Number of Units in Package 2	24
Package 2 Height	15 cm
Package 2 Width	15 cm
Package 2 Length	40 cm
Package 2 Weight	2.705 kg

Offer Sustainability

Sustainable offer status	Green Premium product
REACh Regulation	REACh Declaration
EU RoHS Directive	Pro-active compliance (Product out of EU RoHS legal scope) EU RoHS Declaration
Mercury free	Yes
RoHS exemption information	Yes
Environmental Disclosure	Product Environmental Profile
Circularity Profile	End of Life Information
California proposition 65	WARNING: This product can expose you to chemicals including: Diisononyl phthalate (DINP), which is known to the State of California to cause cancer, and Di-isodecyl phthalate (DIDP), which is known to the State of California to cause birth defects or other reproductive harm. For more information go to www.P65Warnings.ca.gov

Dimensions

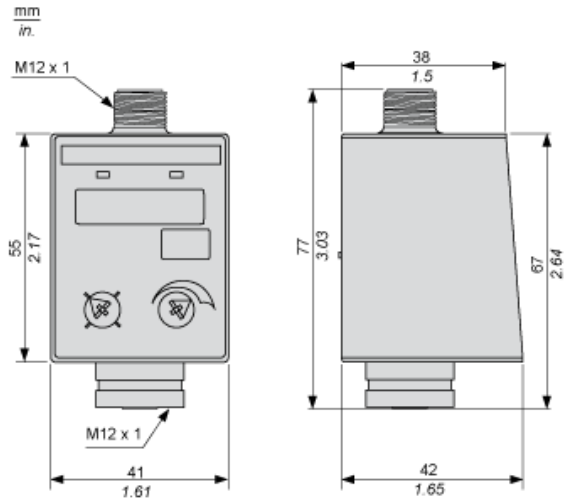

Dimensions

Switch with Metal Bracket for Fixing Horizontally

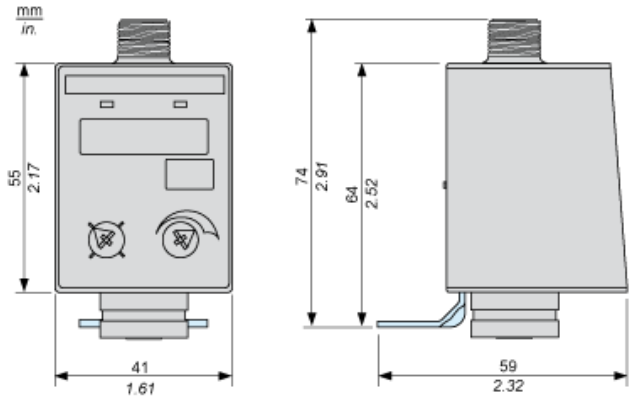

Dimensions

Switch with Metal Bracket for Fixing Vertically or on an Inlet Pipe

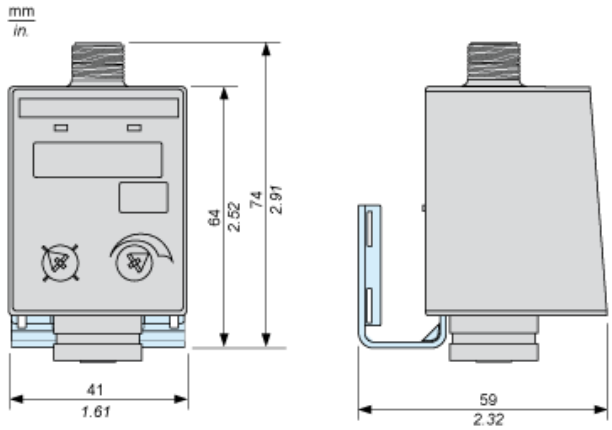

Connections and Schema

Output M12 Male Connector Wiring

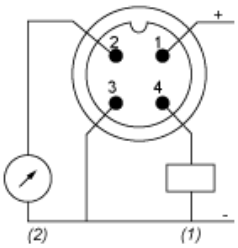

(1) Out
(2) I Out

Connections and Schema

Input M12 Female Connector Wiring

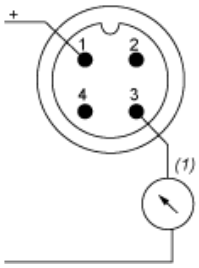

(1) I in = 4-20 mA

Analog Output Description

The 4…20 mA analog output is strictly the image of the pressure transmitter output signal.

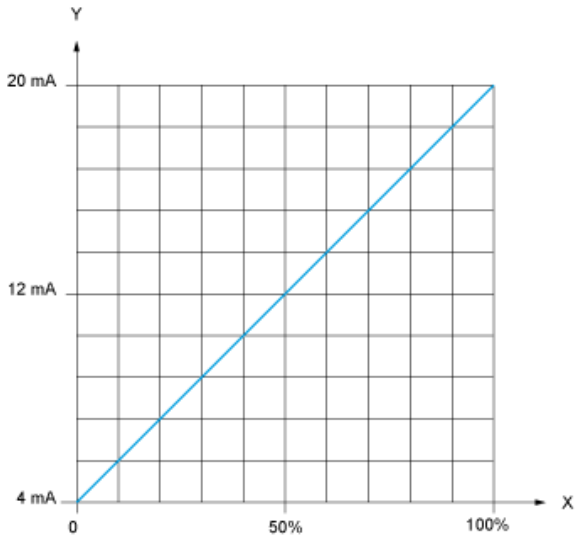

X : Pressure
Y : Analog output signal

Switching Output Description. Hysteresis Mode

The hysteresis switching mode is typically used for the pumping applications.

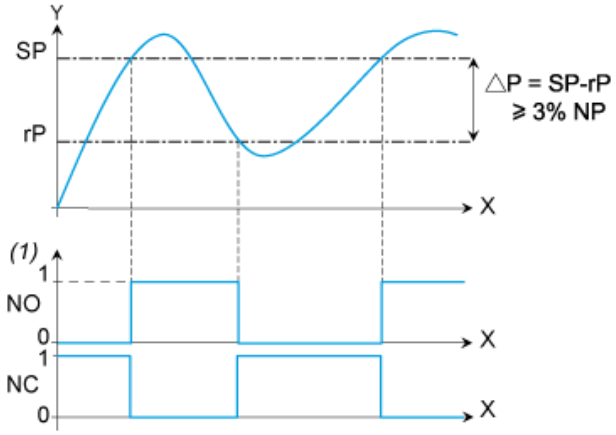

X : Time
Y : Pressure
(1) Output
NP : Nominal Pressure
SP : Set point (adjustable from 5 % to 98 % NP)
rP : Reset point (adjustable from 2 % to 95 % NP)