1-32-010 / Non-sparking signals

E2xS1F Alarm Sounder/Horn

The hazardous area E2xS1F alarm horn sounder is UL/cULs approved for Class I Div 2 and Class II Div 2 as well as IECEx and ATEX certified for Zone 2 and 22 applications.

With a nominal sound level output of 116dB(A) at 1 metre and a choice of 45 alarm tones and 3 remotely selectable stages the E2xS1F alarm sounder horn is suitable for all general signalling duties.
The E2x range features enclosures manufactured from lightweight, corrosion proof PPS and high impact, fire retardant ABS re-entrant flare horns; both of which are suitable for the harshest of environments.

Features

- Automatic synchronisation on multi-sounder system.
- Continuously rated.
- Large termination area.
- Stainless steel fixings.
- Ratchet adjustable stainless steel 'U' bracket for 360° positioning.
- Duplicate cable terminations (in & out for daisy-chain installations).
- Tropicalisation available on request.
- Available with custom tone configurations and frequencies.



Approvals

- ATEX certificate: DEMKO 06 ATEX 0421554X
- IECEx certficate: IECEx ULD 14.0012X
- UL/cUL File ref: E230764

Coding

- IECEx / ATEX:
  II 3G Ex nA IIC T4 Gc Ta -20°C to +55°C
  II 3D Ex tc IIIC T85°C Dc Ta -20°C to +55°C
- NEC Class / Zone ratings US:
  Class I Zone 2 AEx nA IIC T4 Gc Ta -20°C to +55°C
  Zone 22 AEx tc IIIC T85°C Dc Ta -20°C to +55°C
- CEC Class / Zone ratings Canada
  Ex nA IIC T2 Gc Ta -20°C to +55°C
  Ex tc IIIC 85°C Dc Ta -20°C to +55°C
- NEC & CEC Class / Division Ratings for US / Canada
  Class I, Div 2, ABCD T3C Ta -20°C to +55°C
  Class I, Div 2, ABCD T4 Ta -20°C to +40°C
  Class II, Div 2, FG T6 Ta -20°C to +55°C
  Class II, Div 2, FG T6 Ta -20°C to +55°C



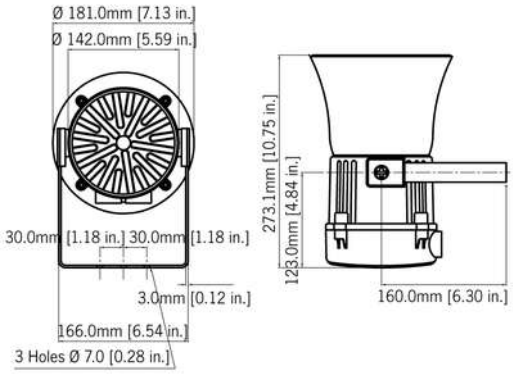

Specification

Maximum output:	116dB(A) @ 1 metre [107dB(A) @ 10ft/3m]
Nominal output:	113dB(A) @ 1m +/- 3dB – Tone 2 [104dB(A) @ 10ft/3m]
No. of tones:	45 (UKOOA/PFEER compliant)
No. of stages:	3
Volume control:	Max. 113dB(A); Min. 105dB(A) - Tone 2
Effective range:	100m/328ft @ 1KHz
Voltages DC:	24Vdc (10-30Vdc); 48Vdc
Voltages AC:	115Vac; 230Vac
Ingress protection:	IP rating per EN60079-0:IP64 IP rating per EN60529:IP66 Type rating per UL50E/NEMA250:4/4X/13
Enclosure material:	UL94V0 PPS & ABS
Lens material:	Borosilicate glass dome with PC prismatic lens cover.
Guard:	Stainless Steel dome guard as standard
Cable entries:	Dual M20x1.5 or 1/2"NPT
Terminals:	0.5 – 2.5mm² (20-14 AWG)
Line monitoring:	Blocking diode included EOL can be factory fitted
Operating temp:	-20 to +55°C [-4° to +131°F]
Storage temp:	-40 to +70°C [-40° to +158°F]
Relative humidity:	90% at 20°C [68°F]
Weight:	DC: 2.5kg/5.5lbs AC: 3.00kg/6.6lbs

*SPL data +/-3dB(A). Measured at optimum voltage.

Part Codes

Part Code:	Ident.:	Description:
Product type:	E2xS1	E2xS1 alarm horn sounder
Flare type:	F	Flare Horn
Voltage:	AC115 AC230 DC024 DC048	115V ac 50/60Hz 230V ac 50/60Hz 24V dc (10-30V dc) 48V dc
Cable entries:	A B C	M20x1.5 & ½" NPT M20x1.5 & M20x1.5 ½" NPT & ½" NPT
Stopping plug material:	N	Nylon
Bracket & tag: [s]	1 2 3 4	304 A2 Stainless Steel 316 A4 Stainless Steel 304 A2 Stainless Steel & Equip. Tag 316 A4 Stainless Steel & Equip. Tag
Approvals:	A1	UL, cULs, IECEx & ATEX
Enclosure:	B	Black

Current Consumption

Version:		Voltage:	Current:
24V dc		10-30vdc	284mA
48V dc		38-58vdc	146mA
115V ac	50/60Hz	+/-10%	104mA
230V ac	50/60Hz	+/-10%	54mA

Tone table

S 1	Description	S 2	S 3
T 2	800/1000Hz @ 0.25 sec Alternating	T 17	T 5
T 3	500/1200Hz @ 0.3Hz 0.5 sec Slow Whoop	T 2	T 5
T 4	800/1000Hz @ 1Hz Sweeping	T 6	T 5
T 5	2400Hz Continuous	T 3	T 20
T 6	2400/2900Hz @ 7Hz Sweeping	T 7	T 5
T 7	2400/2900Hz @ 1Hz Sweeping	T 10	T 5
T 8	500/1200/500Hz @ 0.3Hz Sweeping	T 2	T 5
T 9	1200/500Hz @ 1Hz - DIN / PFEER P.T.A.P.	T 15	T 2
T 10	2400/2900Hz @ 2Hz Alternating	T 7	T 5
T 11	1000Hz @ 1Hz Intermittent	T 2	T 5
T 12	800/1000Hz @ 0.875Hz Alternating	T 4	T 5
T 13	2400Hz @ 1Hz Intermittent	T 15	T 5
T 14	800Hz 0.25sec on, 1 sec off Intermittent	T 4	T 5
T 15	800Hz Continuous	T 2	T 5
T 16	660Hz 150mS on, 150mS off Intermittent	T 18	T 5
T 17	544Hz (100mS)/440Hz (400mS) - NF S 32-001	T 2	T 27
T 18	660Hz 1.8sec on, 1.8sec off Intermittent	T 2	T 5
T 19	1.4KHz-1.6KHz 1s, 1.6KHz-1.4KHz 0.5s -NFC48-265	T 2	T 5
T 20	660Hz Continuous	T 2	T 5
T 21	554Hz/440Hz @ 1Hz Alternating	T 2	T 5
T 22	544Hz @ 0.875 sec. Intermittent	T 2	T 5
T 23	800Hz @ 2Hz Intermittent	T 6	T 5
T 24	800/1000Hz @ 50Hz Sweeping	T 29	T 5
T 25	2400/2900Hz @ 50Hz Sweeping	T 29	T 5
T 26	Bell	T 2	T 15
T 27	554Hz Continuous	T 26	T 5
T 28	440Hz Continuous	T 2	T 5
T 29	800/1000Hz @ 7Hz Sweeping	T 7	T 5
T 30	300Hz Continuous	T 2	T 5
T 31	660/1200Hz @ 1Hz Sweeping	T 26	T 5
T 32	Two T chime.	T 26	T 15
T 33	745Hz @ 1Hz Intermittent	T 2	T 5
T 34	1000 & 2000Hz @ 0.5 sec Alternating - Singapore	T 38	T 45
T 35	420Hz @ 0.625 sec Australian Alert	T 36	T 5
T 36	500-1200Hz 3.75sec /0.25sec. Australian Evac.	T 35	T 5
T 37	1000Hz Continuous - PFEER Toxic Gas	T 9	T 45
T 38	2000Hz Continuous	T 34	T 45
T 39	800Hz 0.25sec on, 1 sec off Intermittent	T 23	T 17
T 40	544Hz (100mS)/440Hz (400mS) - NF S 32-001	T 31	T 27
T 41	Motor Siren - slow rise to 1200 Hz	T 2	T 5
T 42	Motor Siren - slow rise to 800 Hz	T 2	T 5
T 43	1200 Hz Continuous	T 2	T 5
T 44	Motor Siren - slow rise to 2400 Hz	T 2	T 5
T 45	1KHz 1s on, 1s off Intermittent - PFEER Gen. ...	T 38	T 34

No liability is accepted for any consequence of the use of this document. The technical specification of this unit is subject to change without notice due to our policy of continual product development. All dimensions are approximate. This unit is sold subject to our standard conditions of sale, a copy of which is available on request.