StarTech.com

Hard-to-find made easy®

Monitor Wall Mount | Dual Swivel | Premium



Actual product may vary from photos

User Manual

SKU#: ARMWALLDS2

For the latest information and specifications visit
www.startech.com/ARMWALLDS2

Manual Revision: 09/13/2019

Compliance Statements

Use of Trademarks, Registered Trademarks, and other Protected Names and Symbols

This manual may make reference to trademarks, registered trademarks, and other protected names and/or symbols of third-party companies not related in any way to StarTech.com. Where they occur these references are for illustrative purposes only and do not represent an endorsement of a product or service by StarTech.com, or an endorsement of the product(s) to which this manual applies by the third-party company in question. Regardless of any direct acknowledgement elsewhere in the body of this document, StarTech.com hereby acknowledges that all trademarks, registered trademarks, service marks, and other protected names and/or symbols contained in this manual and related documents are the property of their respective holders.

Warning Statements

- Make sure that you assemble this product according to the instructions.
- Do not exceed the weight capacity of this product. Overloading this product might result in injury or property damage. This product can support the following weight: 30.8 lb. (14 kg).
- This product is intended for indoor use only and should not be used outdoors.
- The mounting hardware included with this product might not be adequate for some wall structures. If you lack the necessary expertise to attach this product to the wall structure that you're using, contact a construction professional to install the wall mount or to provide specific mounting instructions for your wall structure.

Varningsmeddelanden

- Se till att du monterar produkten i enlighet med instruktionerna.
- Överskrid inte produktens viktkapacitet. Överbelastning av produkten kan orsaka skada på person eller egendom. Denna produkt har stöd för följande vikter: 14 kg.
- Produkten är endast avsedd för användning inomhus och ska inte användas utomhus.
- Monteringsutrustningen som medföljer produkten kanske inte är lämplig för vissa väggstrukturer. Om du saknar nödvändiga kunskaper för att fästa denna produkt på väggstrukturen som du använder, kontakta en professionell konstruktör för att installera väggmonteringen eller för att ge specifika monteringsinstruktioner för din väggstruktur.

Avertissements

- Assemblez ce produit conformément aux instructions.
- Ne dépassez pas la capacité pondérale du produit. Une surcharge du produit peut entraîner des blessures ou des dommages matériels. Ce produit peut supporter 14 kg.
- Ce produit est uniquement destiné à une utilisation en intérieur et ne doit pas être utilisé à l'extérieur.
- Le matériel de fixation inclus avec ce produit n'est pas forcément approprié pour toutes les structures de murs. Si vous ne disposez pas des compétences nécessaires pour installer ce produit au mur, contactez un professionnel afin qu'il installe le support mural ou qu'il vous fournisse les instructions de montage spécifiques à votre structure de mur.

Warnhinweise

- Beachten Sie bei der Montage dieses Produkts die Montageanweisungen.
- Überschreiten Sie nicht die Tragkraft dieses Produkts. Ein Überladen dieses Produkts kann zu Verletzungen oder zur Beschädigung des Produkts führen. Dieses Produkt ist für folgendes Gewicht geeignet: 14 kg.
- Dieses Produkt ist nur zum Gebrauch in Innenräumen vorgesehen und sollte nicht im Freien verwendet werden.
- Das mitgelieferte Montagematerial ist möglicherweise nicht für jede Wand geeignet. Wenn Ihnen die nötigen Fachkenntnisse zum Anbringen dieses Produkts an einer Wand fehlen, lassen Sie einen Fachmann den Wandhalter anbringen, oder lassen Sie sich von einem Fachmann Montageanweisungen für Ihre Wand erteilen.

Dichiarazioni di avvertenza

- Assicurarsi di Assemblare il prodotto secondo le istruzioni.
- Non superare la capacità di carico del prodotto. Il sovraccarico del prodotto potrebbe causare danni o lesioni. Il prodotto è in grado di supportare i seguenti pesi: 14 kg.
- Il prodotto è destinato all'uso in ambienti interni. Se ne sconsiglia l'impiego in ambienti esterni.
- L'hardware di montaggio incluso con il prodotto potrebbe non essere adeguato ad alcune strutture murarie. Se l'utente non dispone delle competenze necessarie per agganciare il prodotto alla struttura muraria in uso, dovrà contattare un professionista edile per installare il supporto a parete o ottenere istruzioni di montaggio per la struttura muraria in uso.

Mensagens de aviso

- Certifique-se de que monta este produto de acordo com as instruções.
- Não exceda a capacidade de peso deste produto. Sobrecarregar este produto pode resultar em ferimentos ou danos de propriedade. Este produto pode suportar o seguinte peso: 14 kg.
- Este produto destina-se apenas a uma utilização no interior e não deve ser utilizado no exterior.
- Este produto requer uma ligação à terra. Não utilize este produto sem uma ligação à terra.

- O hardware de montagem incluído com este produto pode não ser adequado para algumas estruturas de parede. Se não tiver o conhecimento necessário para fixar este produto à estrutura de parede que está a usar, contacte um profissional de construção para fazer a instalação em parede ou para fornecer instruções de montagem específicas para a sua estrutura de parede.

Advertencias de uso

- Asegúrese de ensamblar este producto según las instrucciones.
- Asegúrese de no exceder la capacidad de peso de este producto. La sobrecarga de este producto puede causar lesiones personales o daños en la propiedad. Este producto tiene capicidad para el siguiente peso: 14 kg.
- El uso de este producto es solo para interiores y no debe utilizarse en exteriores.
- El hardware de montaje incluido con este producto puede no ser adecuado para algunas estructuras de pared. Si no tiene la experiencia suficiente para fijar este producto a la estructura de la pared correspondiente, póngase en contacto con un profesional de la construcción para instalar el soporte de pared o para que le proporcione las instrucciones específicas de montaje para su estructura de pared.

Waarschuwingen

- Zorg dat u dit product volgens de instructies in elkaar zet.
- Overschrijd de maximale capaciteit van dit product niet. Overbelasting van dit product kan letsel of materiële schade veroorzaken. Dit product ondersteunt het volgende gewicht: 14 kg.
- Dit product is alleen bedoeld voor binnengebruik en mag niet buiten worden gebruikt.
- De bij dit product geleverde montagemiddelen kunnen niet geschikt zijn voor sommige wandstructuren. Als u onvoldoende kennis hebt om dit product aan de door u gebruikte wandstructuur te bevestigen, neem dan contact op met een bouwkundige om de steun aan de muur te installeren of specifieke montage-instructies voor uw wandstructuur te geven.

注意

- 必ず取扱説明書に従って本製品の組み立てを行って下さい。
- 本製品で定められた最大積載重量を超えないようにして下さい。最大積載重量をオーバーした場合、怪我をする恐れや器物破損の恐れがあります。本製品は、モニター1台あたり14kgまで支持できます。

- 本製品は、室内での使用を想定しています。戸外では使用しないで下さい。
- 本製品に同梱されている取付け金具は、ご使用になる壁の構造に対して十分ではない場合があります。本製品を壁面に取り付ける時、十分な専門知識が不足していると判断された場合、専門業者に連絡を取って、本製品の取り付けを行ってもらうか、お客様の壁の構造に適した取り付け方法を教えてもらってから取り付けを行って下さい。

Safety Statements

Safety Measures

- Cables (including power and charging cables) should be placed and routed to avoid creating electric, tripping or safety hazards.

Mesures de sécurité

- Les câbles (y compris les câbles d'alimentation et de chargement) doivent être placés et acheminés de façon à éviter tout risque électrique, de chute ou de sécurité

安全対策

- ケーブル（電源ケーブルと充電ケーブルを含む）は、適切な配置と引き回しを行い、電気障害やつまづきの危険性など、安全上のリスクを回避するようにしてください。

Misure di sicurezza

- I cavi (inclusi i cavi di alimentazione e di ricarica) devono essere posizionati e stesi in modo da evitare pericoli di inciampo, rischi di scosse elettriche o pericoli per la sicurezza.

Säkerhetsåtgärder

- Kablar (inklusive elkablar och laddningskablar) ska dras och placeras på så sätt att risk för snubblingsolyckor och andra olyckor kan undvikas.

StarTech.com
Hard-to-find made easy®

Table of Contents

Compliance Statements 1

Warning Statements 2

Safety Statements 5

Product Diagram 7

Product Dimensions/Rotation 8

Product Information 9

- Specifications 9
- Package Contents 10
- Requirements 12

Installation 12

- Mounting the Wall Mount 12
- Attaching the Swivel Arm 14

Removing the Swivel Arm 15

- Attaching a Monitor 16
- Attaching the Monitor Mount 16

Removing the Monitor Mount 18

Adjusting the Monitor Tilt 18

Product Diagram

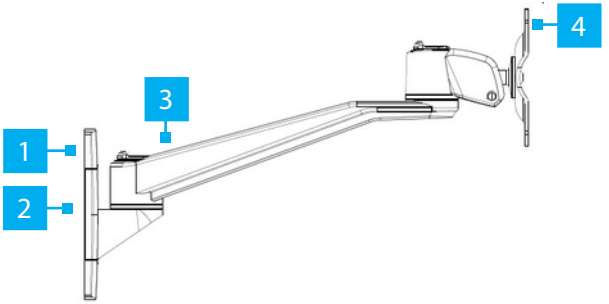

1	*Decorative Cap*	3	*Swivel Arm*
2	*Wall-Mount Bracket*	4	*Monitor Mount*

Product Dimensions/Rotation

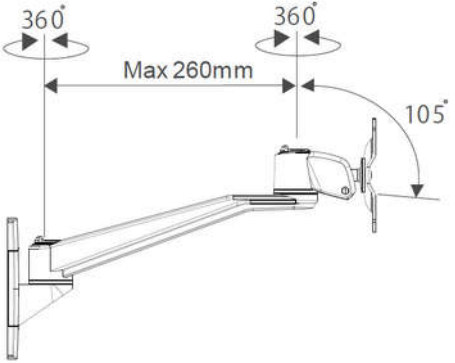

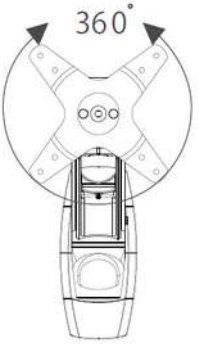

Product Information

Specifications

Type of Measurement	Measurement
VESA Mounting Hole Pattern 	**75x75** **100x100**
Tilt 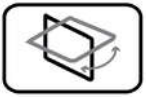	**+90º to -15º**
Screen Size 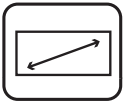	**Maximum 30 in. (762 mm)**
Rotate 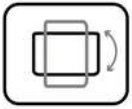	**360º**

Swivel 	**+180º to -180º**
Weight/Load Capacity 	**30.8 lb. (14 kg)**

Package Contents

 *Wall-Mount Bracket* *Qty: One*	 *Swivel Arm* *Qty: One*

 *Monitor Mount* *Qty: One*	 *Hex Key* *Qty: One*
 *Hand Screw* *Qty: Four*	 *Mounting Screws* *Qty: Two*
 *Wall Plugs* *Qty: Two*	

Requirements

- Phillips Head Screwdriver x 1
- Writing Utensil x 1
- Level x 1

Installation

Mounting the Wall Mount

Notes: *Product mounting should be completed by a certified professional as per the local safety and building code guidelines.*

Wall structures vary, and it's important to make sure that the type of structure and mounting hardware that you're using will properly support the mounted equipment. Failure to do so may result in personal injury and/or equipment damage.

1. Before installing the **Wall Mount** onto the mounting surface, contact a professional contractor.
2. After consulting a professional, the **Wall Mount** can be mounted using the **Mounting Hardware** included.

   Note: *The provided* **Mounting Hardware** *may not be suitable for use with all wall structures.*
3. (Optional) While mounting, use **Wall Screw Anchors** if required.
4. Remove the **Decorative Caps** on the **Wall-Mount Bracket** by sliding them off of the ends, before mounting the **Wall Mount**.

5. When the **Wall-Mount Bracket** has been mounted, slide the **Decorative Caps** over the top and bottom of the **Wall-Mount Bracket**. The **Decorative Caps** hide the screws used to secure the **Wall-Mount Bracket** to the mounting surface.

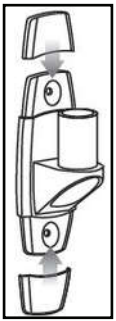

Installing the Decorative Caps

Attaching the Swivel Arm

1. Align the **Mounting Hole** on the **Swivel Arm** with the **Mounting Peg** on the **Wall-Mount Bracket**.
2. Slide the **Mounting Hole** on the **Swivel Arm** over the **Mounting Peg** until it clicks in place.

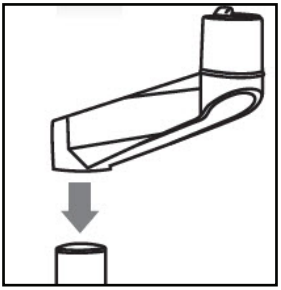

Attaching the Swivel Arm to the Mounting Peg

3. Using the **Hex Key** (included), tighten the **Hex Screw** on the side of the **Swivel Arm**, to increase the swivel effort or fix the arm in place.

Removing the Swivel Arm

1. Slide the **Thumb Clip** away from the **Swivel Arm,** disengaging the locking mechanism.

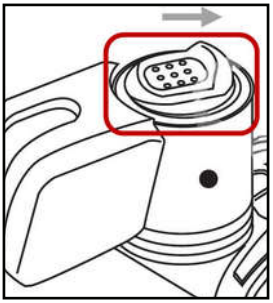

Thumb Clip

2. While holding the **Thumb Clip** and the weight of the **Swivel Arm,** lift the **Swivel Arm** up, sliding the **Mounting Peg** out of the **Mount Hole**.

Attaching a Monitor

1. Align the **Mounting Holes** (x 4) on the **Monitor Mount** with the mounting holes on the back of the **Monitor**.
2. Insert the **Hand Screws** through the **Monitor Mount** and into the back of the **Monitor**.
3. Using your fingers, tighten the **Hand Screws**.

Warning! *Do not over-tighten the screws. If you encounter resistance while you're tightening the screws, stop tightening. Failure to do so could result in damage to the monitor.*

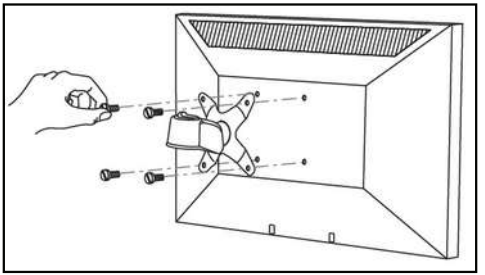

Attaching a Monitor

Attaching the Monitor Mount

Notes: *Attaching the* **Monitor Mount** *may require two people.*

The **Wall Mount** *supports up to a maximum of 30.8 lb. (14 kg).*

1. While supporting the weight of the **Monitor**, carefully align the **Mounting Hole** on the **Monitor Mount** with the **Mounting Peg** on the top **Spring Arm**.
2. Slide the **Mounting Hole** on the **Monitor Mount** over the **Mounting Peg** until it clicks into place.

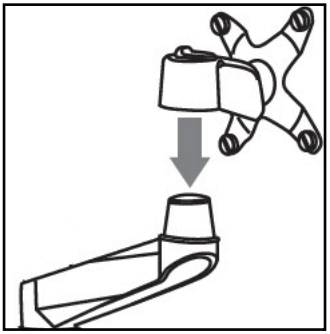

Attaching the Monitor Mount

3. Using the **Hex Keys**, adjust the swivel tension of the **Monitor Mount** by loosening or tightening the **Hex Screws** located on the **Monitor Mount** next to the **Mounting Hole**.

Removing the Monitor Mount

1. Slide the **Thumb Clip** towards the **Swivel Arm,** disengaging the locking mechanism.

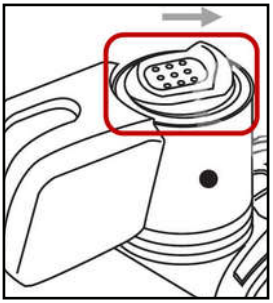

Thumb Clip

2. While holding the **Thumb Clip** and the weight of the **Monitor Mount,** lift the **Monitor Mount** up sliding the **Mounting Peg** out of the **Mounting Hole**.

Adjusting the Monitor Tilt

- While supporting the weight of the **Monitor**, use the **Hex Key** (included) to loosen or tighten the **Hex Screw** on the side of the **Monitor Mount,** until the tension can hold the weight of the **Monitor** but it is still adjustable.

  Note: *The screw cap located on the opposite side of the* **Hex Screw** *is not used for tilt adjustments.*

Warranty Information

This product is backed by a ten-year warranty.

For further information on product warranty terms and conditions, please refer to www.startech.com/warranty.

Limitation of Liability

In no event shall the liability of StarTech.com Ltd. and StarTech.com USA LLP (or their officers, directors, employees or agents) for any damages (whether direct or indirect, special, punitive, incidental, consequential, or otherwise), loss of profits, loss of business, or any pecuniary loss, arising out of or related to the use of the product exceed the actual price paid for the product.

Some states do not allow the exclusion or limitation of incidental or consequential damages. If such laws apply, the limitations or exclusions contained in this statement may not apply to you.

StarTech.com
Hard-to-find made easy®

Hard-to-find made easy. At StarTech.com, that isn't a slogan. It's a promise.

StarTech.com is your one-stop source for every connectivity part you need. From the latest technology to legacy products — and all the parts that bridge the old and new — we can help you find the parts that connect your solutions.

We make it easy to locate the parts, and we quickly deliver them wherever they need to go. Just talk to one of our tech advisors or visit our website. You'll be connected to the products you need in no time.

Visit www.startech.com for complete information on all StarTech.com products and to access exclusive resources and time-saving tools.

StarTech.com is an ISO 9001 Registered manufacturer of connectivity and technology parts. StarTech.com was founded in 1985 and has operations in the United States, Canada, the United Kingdom and Taiwan servicing a worldwide market.

Reviews

Share your experiences using StarTech.com products, including product applications and setup, what you love about the products, and areas for improvement.

StarTech.com Ltd.
45 Artisans Cres.
London, Ontario
N5V 5E9
Canada

StarTech.com LLP
2500 Creekside Pkwy.
Lockbourne, Ohio
43137
U.S.A.

StarTech.com Ltd.
Unit B, Pinnacle
15 Gowerton Rd., Brackmills
Northampton
NN4 7BW
United Kingdom

FR: startech.com/fr
DE: startech.com/de
ES: startech.com/es
NL: startech.com/nl
IT: startech.com/it
JP: startech.com/jp