THE INFORMATION CONTAINED IN THIS DRAWING IS THE SOLE PROPERTY OF L-COM, INC. ANY REPRODUCTION IN PART OR WHOLE WITHOUT THE WRITTEN PERMISSION OF L-COM, INC. IS PROHIBITED.

REVISIONS			
REV	DESCRIPTION	DATE	APPROVED
E	ECN 5469: RE-MODELED AND NEW FORMAT	4/28/11	D.FRISIELLO

DESCRIPTION	MATERIAL	FINISH
BODY	BRASS	NICKEL PLATE
DIELECTRIC	TFE	-
CENTER PIN	BRASS	GOLD PLATE
GASKET	RUBBER	-
RETAINING RING	BRASS	NICKEL PLATE
SHELL	BRASS	NICKEL PLATE

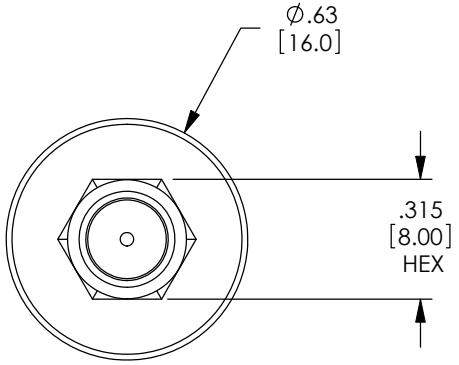

SMA PLUG

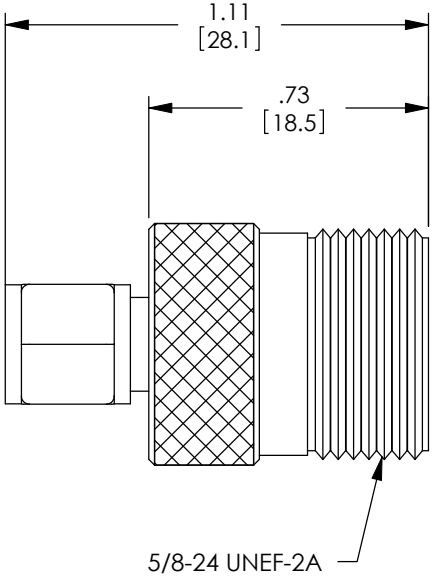

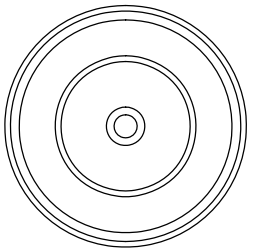

TYPE N JACK

NOTES:

ELECTRICAL:
IMPEDANCE: 50 OHMS
FREQUENCY RANGE: DC ~ 6 GHz
VOLTAGE RATING: 500 VOLTS PEAK
DIELECTRIC WITHSTANDING VOLTAGE: 1000 VOLTS RMS

MISCELLANEOUS:
COMPONENT SHALL BE INDIVIDUALLY PACKAGED IN ACCORDANCE WITH L-COM SPECIFICATION PS-0031.

ALL DIMENSIONS ARE FOR REFERENCE ONLY.

RoHS Compliant ✔

UNLESS OTHERWISE SPECIFIED,
DIMENSIONS ARE IN INCHES [mm]
OVERALL CABLE LENGTH TOLERANCE:
≤12 [305] = +1 [25] / -0
>12 [305] ≤60 [1524] = +2 [51] / -0
>60 [1524] ≤120 [3048] = +4 [102] / -0
>120 [3048] ≤300 [7620] = +6 [152] / -0
>300 [7620] = +5% / -0%
ALL OTHER DIMENSIONAL TOLERANCES:
.X = ± .2
.XX = ± .02
.XXX = ±.005
PROJECTION

APPROVALS	DATE
DRAWN BY C.MCCORMICK	06/05/2001
CHECKED BY D.PARHAM	06/05/2001
APPROVED BY ENG	07/02/2001

CONFIGURATION DETAILS OF UNDIMENSIONED FEATURES MAY VARY

COLOR VARIATIONS MAY OCCUR

REF

L-COM Global Connectivity
45 BEECHWOOD DRIVE
NORTH ANDOVER, MA
01845

CATEGORY
COAXIAL

PRODUCT DESCRIPTION
ADAPTER SMA PLUG TO TYPE N JACK

SIZE	FSCM NO.	DWG. NO.	REV.
A	43321	BA25	E

SCALE: NONE | CAD FILE: BA25.SLDDRW | SHEET 1 OF 1