Brand of NTN corporation

Technical data

6318EE

Single row deep groove ball bearings



Deep groove ball bearing, radial contact, pressed steel cage, contact seals on both sides

VISUAL (S)

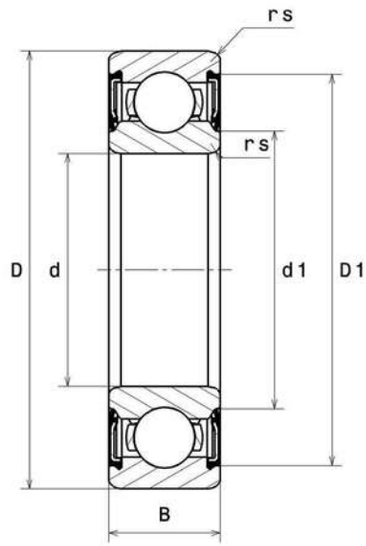

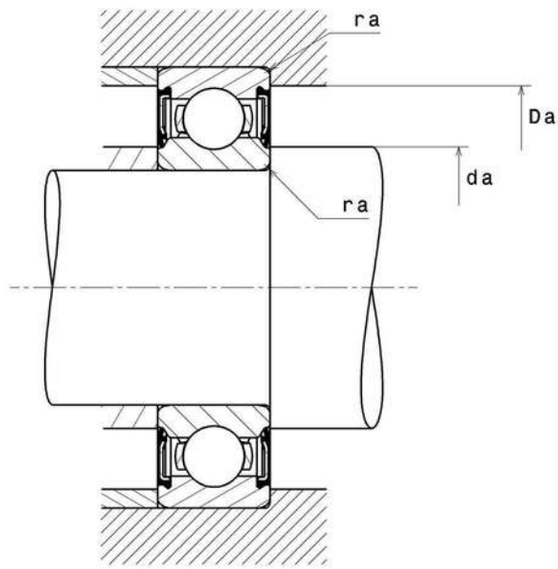

NTN Europe
1 rue des Usines · BP 2017 · 74010 Annecy Cedex · France · Tel. +33 (0)4 50 65 30 00
S.A. au capital de 322 639 919 € · RCS ANNECY B 325 821 072 · Id. Fiscale : FR 48 325 821 072
SIRET 325 821 072 00015 · Code APE 2815 Z · Code NACE 28.15

6318EE
Single row deep groove ball bearings

PRODUCT DEFINITION	
Brand	SNR
d - Internal diameter	90 mm
D - External diameter	190 mm
B - Bearing/Inner ring width	43 mm
d1 - External diameter inner ring	112,2 mm
D1 - Inner diameter outer ring	167,7 mm
rs - Min fillet radius	3 mm
Radial clearance class	CN
Mass	4,973 kg

PRODUCT PERFORMANCE	
C - Dynamic load	150000000 mN
C0 - Static load	107000000 mN
Cu - Fatigue limit load	4100000 mN
f0 - Coefficient	13.3
N lim - Mechanical Limit Speed	15600 °/s
Tmin - Min operating temperature	243,15 °K
Tmax - Max operating temperature	393,15 °K

BEARING FREQUENCIES	
BPFO - Over rolling frequency on outer ring (60 rpm)	3.093 Hz
BPFI - Over rolling frequency on inner (60 rpm)	4.907 Hz
BSF - Over rolling frequency on rolling element (60 rpm)	4.183 Hz
BRF - Rotational frequency – rolling element (60 rpm)	2.092 Hz
FTF - Rotational frequency - cage (60 rpm)	0.387 Hz

6318EE
Single row deep groove ball bearings

ABUTMENT	
da min - Min shoulder diameter IR	103 mm
da max - Max shoulder diameter IR	112,2 mm
Da max - Max shoulder diameter OR	177 mm
ra max - Max shaft & housing fillet radius	2,5 mm

INDUSTRY CALCUL FACTORS

Equivalent dynamic radial load

P = X.Fr + Y.Fa

$\frac{f_0 F_a}{C_0}$	e	Fa / Fr ≤ e		Fa / Fr > e	
		X	Y	X	Y
0.172	0.19	1	0	0.56	2.3
0.345	0.22				1.99
0.689	0.26				1.71
1.03	0.28				1.55
1.38	0.3				1.45
2.07	0.34				1.31
3.45	0.38				1.15
5.17	0.42				1.04
6.89	0.44				1

Equivalent static radial load

Po = Xo.Fr + Yo.Fa

X_0	Y_0
0.6	0.5

For single or DT bearing arrangement :

If Po <Fr, then use Po = Fr