Mod. G7580 - Fittings Series 7000 - Automation

Product code: G7580 10-12

Datasheet creation date: 12/12/2025 08:30

Check the most updated document online click here



TECHNICAL DATA

Mod.	G7580 10-12

Products designed for industrial applications. General terms and conditions for sale are available on www.camozzi.com.
This document contains a brief description of the products offered by Camozzi Automation at time of publication.
For more complete and up to date information about the Camozzi Automation product range, please refer to our online catalogue at https://shop.camozzi.com

Mod. G7580 - Fittings Series 7000 - Automation

Product code: G7580 10-12

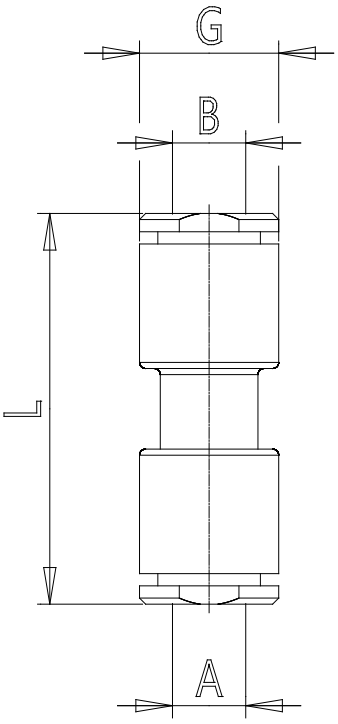

DIMENSIONS

A (mm)	10
B (mm)	12
GD (mm)	20.0
L (mm)	45.5
Weight (g)	9.0

Products designed for industrial applications. General terms and conditions for sale are available on www.camozzi.com.
This document contains a brief description of the products offered by Camozzi Automation at time of publication.
For more complete and up to date information about the Camozzi Automation product range, please refer to our online catalogue at https://shop.camozzi.com