60x60x38 mm

41.5~56.5 CFM



Model	P/N	Bearing ◉ 2BALL ○ Sleeve	Rating Voltage (VDC)	Power Current (AMP)	Power Consumption (WATTS)	Speed (RPM)	Air Flow (CFM)	Static Pressure (Inch-H_2O)	Noise (dBA)	Weight (g)	Curve
PMD1206PMB1-A	(2).GN	◉	12	0.88	10.6	8000	56.5	0.92	56	90	1
PMD1206PMB2-A	(2).GN	◉	12	0.58	7.0	7000	49.2	0.71	52	90	2
PMD1206PMB3-A	(2).GN	◉	12	0.43	5.2	6000	41.5	0.53	47	90	3
PMD2406PMB1-A	(2).GN	◉	24	0.43	10.3	8000	56.5	0.92	56	90	1
PMD2406PMB2-A	(2).GN	◉	24	0.31	7.4	7000	49.2	0.71	52	90	2
PMD2406PMB3-A	(2).GN	◉	24	0.22	5.3	6000	41.5	0.53	47	90	3
PMD4806PMB1-A	(2).GN	◉	48	0.24	11.5	8000	56.5	0.92	56	90	1
PMD4806PMB2-A	(2).GN	◉	48	0.18	8.6	7000	49.2	0.71	52	90	2
PMD4806PMB3-A	(2).GN	◉	48	0.13	6.2	6000	41.5	0.53	47	90	3

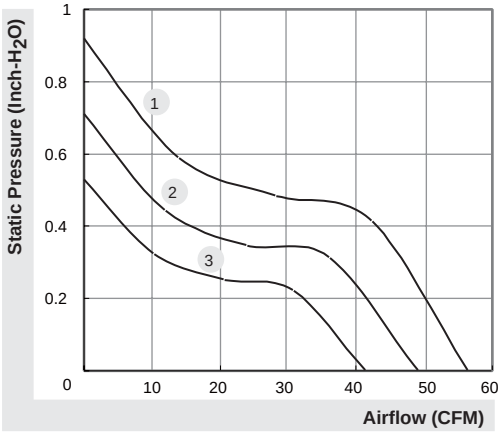

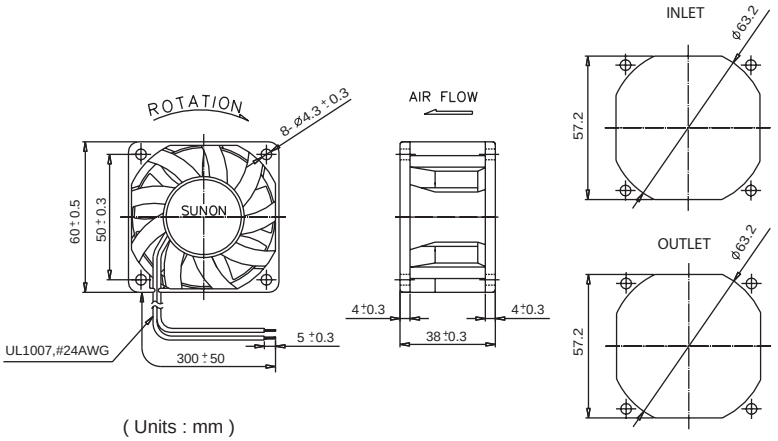

(Units : mm)

*All model could be customized. Please contact with Sunon Sales.
*Specifications subject to change without notice. Please Visit SUNON web site at http://www.sunon.com for update information.