Product data sheet
Characteristics

XS618B4MAL5
inductive sensor XS6 M18 - L60mm - brass - Sn12mm - 24..240VAC/DC - cable 5m



Main

Range of product	OsiSense XS
Series name	General purpose
Sensor type	Inductive proximity sensor
Device application	-
Sensor name	XS6
Sensor design	Cylindrical M18
Size	60 mm
Body type	Fixed
Detector flush mounting acceptance	Non flush mountable
Material	Metal
Type of output signal	Discrete
Wiring technique	2-wire
[Sn] nominal sensing distance	12 mm
Discrete output function	1 NO
Output circuit type	AC/DC
Electrical connection	Cable
Cable length	5 m
[Us] rated supply voltage	24...240 V AC/DC 50/60 Hz
Switching capacity in mA	5...200 mA DC 5...300 mA AC
IP degree of protection	IP68 double insulation conforming to IEC 60529 IP69K conforming to DIN 40050

Complementary

Thread type	M18 x 1
Detection face	Frontal
Front material	PPS
Enclosure material	Nickel plated brass
Operating zone	0…9.6 mm
Differential travel	1...15% of Sr
Cable composition	2 x 0.34 mm²
Wire insulation material	PvR
Status LED	Output state: 1 LED (yellow)
Supply voltage limits	20…264 V AC/DC
Maximum residual current	0.8 mA open state
Switching frequency	<= 1000 Hz DC <= 25 Hz AC
Maximum voltage drop	<5.5 V (closed)
Maximum delay first up	30 ms
Maximum delay response	0.5 ms
Maximum delay recovery	0.5 ms
Marking	CE
Threaded length	44 mm
Length	60 mm
Net weight	0.24 kg

The information provided in this documentation contains general descriptions and/or technical characteristics of the performance of the products contained herein.
This documentation is not intended as a substitute for and is not to be used for determining suitability or reliability of these products for specific user applications.
It is the duty of any such user or integrator to perform the appropriate and complete risk analysis, evaluation and testing of the products with respect to the relevant specific application or use thereof.
Neither Schneider Electric Industries SAS nor any of its affiliates or subsidiaries shall be responsible or liable for misuse of the information contained herein.

Environment

Product certifications	CSA UL
Ambient air temperature for operation	-25…70 °C
Ambient air temperature for storage	-40…85 °C
Vibration resistance	25 gn amplitude = +/- 2 mm (f = 10…55 Hz) conforming to IEC 60068-2-6
Shock resistance	50 gn for 11 ms conforming to IEC 60068-2-27

Offer Sustainability

Sustainable offer status	Green Premium product
REACh Regulation	REACh Declaration
EU RoHS Directive	Pro-active compliance (Product out of EU RoHS legal scope) EU RoHS Declaration
Mercury free	Yes
RoHS exemption information	Yes
Environmental Disclosure	Product Environmental Profile
Circularity Profile	End Of Life Information

Contractual warranty

Warranty	18 months

XS618B4MAL5

Dimensions

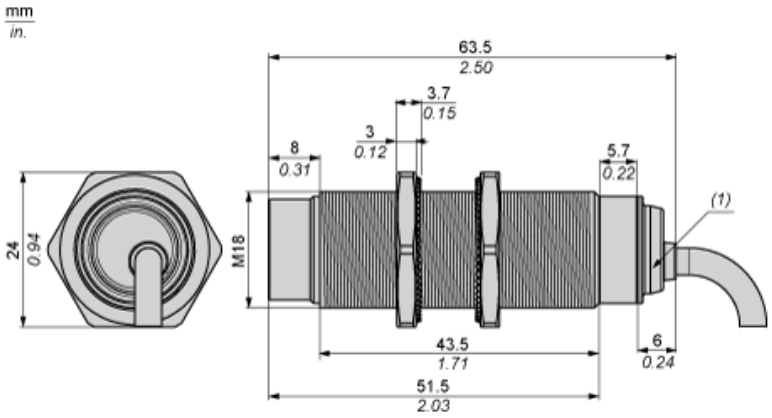

(1) LED

Minimum Mounting Distances

Side by side

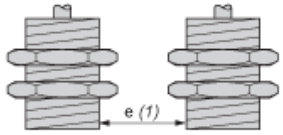

e (1) 72 mm/2.83 in.
≥

Face to face

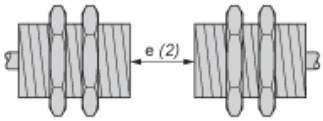

e (2) 144 mm/5.67 in.
≥

Facing a metal object

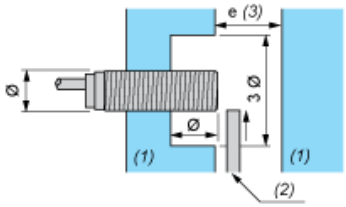

e (3) 36 mm/1.42 in
≥
(1) Metal
(2) Object to be detected

Mounting

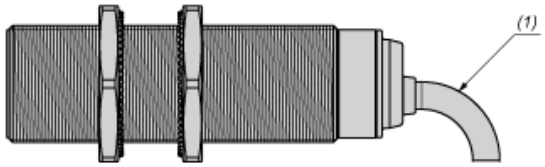

(1) Bending cable: 4 x external cable diameter

Wiring Schemes

2-Wire AC or DC

NO output

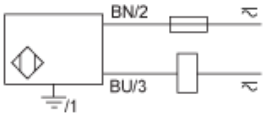

BU : Blue
BN : Brown