Your Expert Partner for **Human Machine Interfaces**

Actuator

Distribution by
Rs-online

19-
279.015



https://rs-online.eao.com/component/19-279.01...

Your product:



19-279.015
Actuator

FRONT

Front dimension:	Ø 9 mm
Front form:	Round
Front bezel colour:	Black
Front bezel material:	Plastic

MOUNTING

Design:	Raised
Mounting cut-out:	Ø 8 mm
Mounting type:	Panel mounting

OPERATING-/INDICATION PART

Lens illumination:	Illuminated

ELECTRICAL CHARACTERISTICS

Switching voltage and switching current:	Silver plated 50 VAC, 0.8 A/72 VDC, 0.7 A Gold plated 50 VAC, 100 mA/72 VDC, 70 mA
Contacts:	1 NO
Switching rating:	50 V @ 0,8 A
Electric strength:	2500 VAC, 50 Hz, 1 minute, as per IEC 60512-2-11 between all terminals and earth

MECHANICAL CHARACTERISTICS

Terminal:	Plug-in terminal, 2 x 0.5 mm
Contact material:	Silver
Switching action:	Maintained
Switching system:	Snap-action switching element
Switching system:	Single-break, snap-action switching system with 1 normally open contact
Mechanical lifetime:	2 Mil. cycles of operation
Operating force:	1.6 N
Operating Travel:	ca. 2.8 mm ± 0.2 mm
Tightening torque:	Fixing nut max. 0.2 Nm
Wire cross section:	Max. wire diameter 2 wires à 0.8 mm Max. wire cross-section of stranded cable 1 x 0.75 mm^2
Weight:	0.002 kg

AMBIENT CONDITION

IP Protection:	IP40 front side, according to DIN EN 60529
Operating temperature:	– 25 °C ... + 45 °C with filament lamp, – 25 °C ... + 65 °C with LED, – 25 °C ... + 65 °C without illumination, mounted as a block, make sure the heat can escape freely
Storage temperature:	– 40 °C ... + 85 °C

CERTIFICATE

Conformities:	2011 / 65 / EC (RoHS)
REACH:	REACH compliant
RoHS:	RoHS compliant

OTHER

Short Description:	Actuator, Ø 8 mm, Ø 9 mm, Illuminated, Round, Black, Plastic, 1 NO, Maintained, Plug-in terminal, 2 x 0.5 mm
Internal size:	Ø 7,3 mm
Housing colour:	Black
Housing material:	Plastic
Wiring diagrams:	

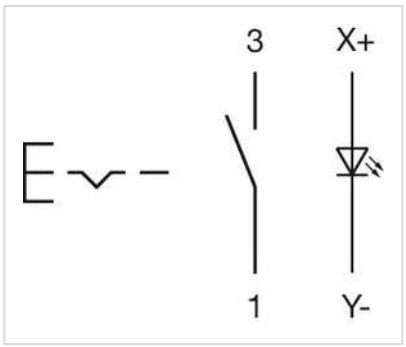

Component layouts:

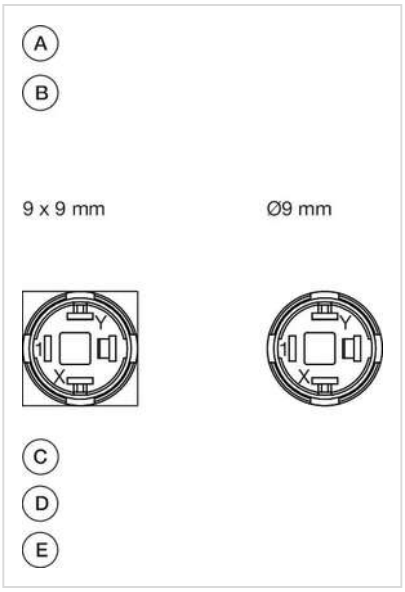

A = Terminals (rear side)
B = Illuminated pushbutton
C = x = Contact No.
D = 2 = Normally open
E = 4 = Normally close

Mounting cut-outs:

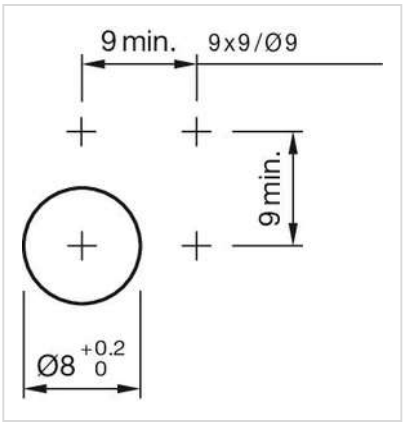

Dimension drawings:

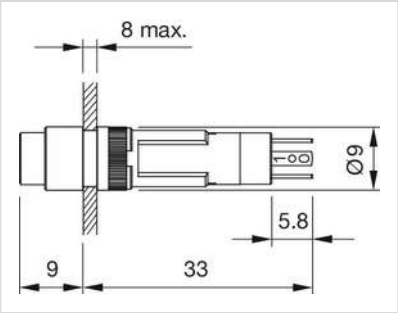
8 max.
Ø9
5.8
9
33