Brand of NTN corporation

Technical data

3306AC3

Double row angular contact ball bearings

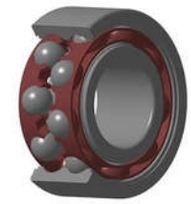

Double row angular contact ball bearing, polyamide cage, open

VISUAL (S)

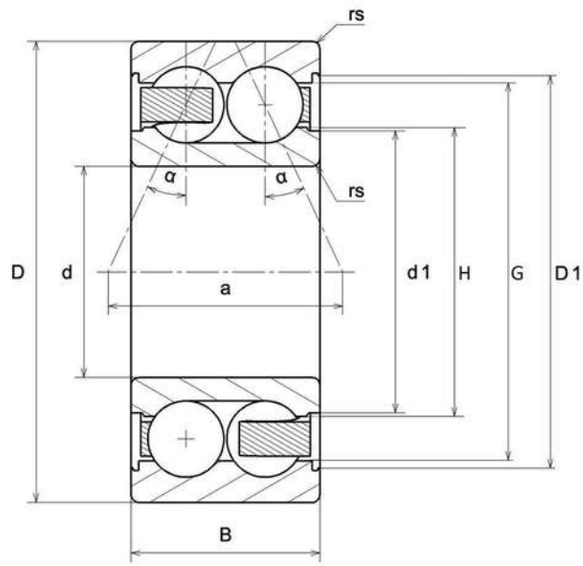

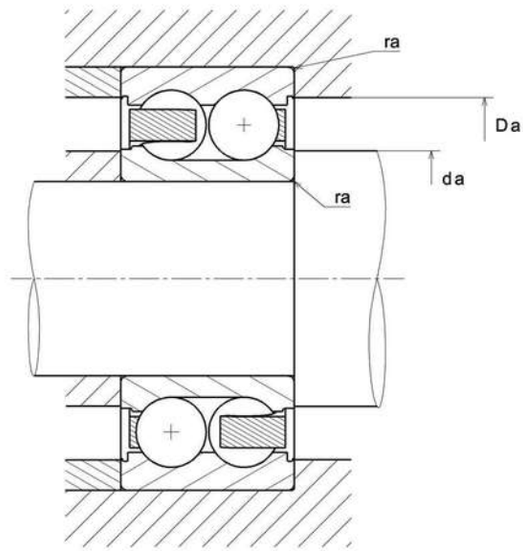

NTN Europe
1 rue des Usines · BP 2017 · 74010 Annecy Cedex · France · Tel. +33 (0)4 50 65 30 00
S.A. au capital de 322 639 919 € · RCS ANNECY B 325 821 072 · Id. Fiscale : FR 48 325 821 072
SIRET 325 821 072 00015 · Code APE 2815 Z · Code NACE 28.15

3306AC3
Double row angular contact ball bearings

PRODUCT DEFINITION	
Brand	SNR
d - Internal diameter	30 mm
D - External diameter	72 mm
B - Bearing/Inner ring width	30,2 mm
d1 - External diameter inner ring	42 mm
D1 - Inner diameter outer ring	63 mm
a - Charge load application point	36,5 mm
- Contact angle	25 °
rs - Min fillet radius	1,1 mm
Radial clearance class	C3
Precision class	P0
Mass	0,519 kg

PRODUCT PERFORMANCE	
C - Dynamic load	42800000 mN
C0 - Static load	29700000 mN
Cu - Fatigue limit load	1870000 mN
f0 - Coefficient	13.5
N ref - Reference thermal speed	42600 °/s
N lim - Mechanical Limit Speed	55800 °/s
Tmin - Min operating temperature	253,15 °K
Tmax - Max operating temperature	393,15 °K

BEARING FREQUENCIES	
BPFO - Over rolling frequency on outer ring (60 rpm)	3.125 Hz

3306AC3
Double row angular contact ball bearings

BEARING FREQUENCIES	
BPFI - Over rolling frequency on inner (60 rpm)	4.875 Hz
BSF - Over rolling frequency on rolling element (60 rpm)	3.947 Hz
BRF - Rotational frequency – rolling element (60 rpm)	1.974 Hz
FTF - Rotational frequency - cage (60 rpm)	0.391 Hz

ABUTMENT	
da min - Min shoulder diameter IR	36,5 mm
Da max - Max shoulder diameter OR	65,5 mm
ra max - Max shaft & housing fillet radius	1 mm