Part No	CGCXX00000
Description	Configurable Generic Controller

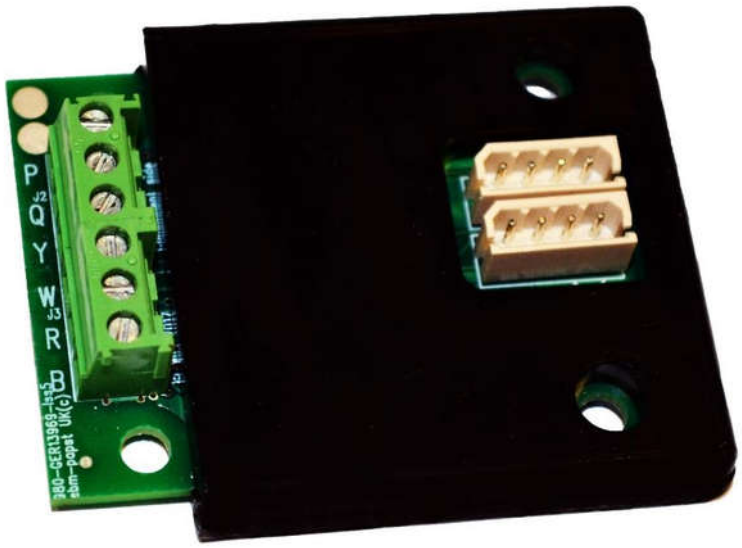

Issue	Date	Author	Comments
2	30/09/2019	F.Pagliarini	Second Release

Table of Contents

Safety Notice 2
Introduction 3
Specification 3
Installation 3
Mechanical Outline & Connection Detail 4
Connections 5
Function 5
Alarms 5
Monitor 6
Transport and Storage 6
Maintenance and Servicing 6
CE Document – Copy of first sheet 6

ebm-papst UK Ltd
Chelmsford Business Park Chelmsford Essex CM2 5EZ
Telephone: +44(0)1245468555 Fax: +44(0)1245466336
e-mail sales@uk.ebmpapst.com

Operating and Programming instructions

To download the full operating and maintenance instructions, programming software and the instruction manual for the software please visit www.ebmpapst.co.uk/cgc
The CE documentation can be found on the full operating and maintenance instructions available from the website

To assure proper usage, we ask you to read these operating instructions carefully before installation and commissioning of the control device.

Safety Notice

⚠ **CAUTION – Safety**

- The configurable generic controller is only suitable for a low voltage (10V or 12 to 57V DC) supply
- Electrical installations should only be carried out by qualified personnel

⚠ **CAUTION – Electro-Static Discharge**

Many modern electronic components are susceptible to damage from Electro-Static Discharge (Static Electricity). During programming and commissioning, avoid unnecessary contact with electronic components on PCB's. PCB's which are sensitive to static discharges should be stored and transported in anti-static packaging until they are required to be used.

⚠ **Warning – Do not operate in an explosive atmosphere**

⚠ **Warning – Fan may start during connection and programming. Secure fan safely before applying power**

Introduction

The Configurable Generic Controller (CGC) is designed to regulate the rotational speed of ebm-papst 0-10V and open collector PWM controlled fans. It operates on a wide supply voltage range from 10 to 57 volts DC, and due to its low power consumption, it can be powered from the ebm-papst small EC motors 10V DC output.

The controller's factory default has no profile assigned to it. A configuration file must be created and downloaded to the controller for it to produce an output signal in response to an input signal.

Please see www.ebmpapst.co.uk/cgc for a list of configuration files provided by ebm-papst, which have been derived from legacy CPC and EC controllers and must be used as their direct replacement.

Specification

Part Number	**CGCXX00000**
Supply Voltage	10V or 12 to 57V DC
Supply Current	Up to 1mA (@10VDC), Up to 4.5mA (@57VDC)
Control Output	Programmable 0-10V DC at 2Khz (Control) or Open collector PWM fan speed control signal at 8Khz (Control) Open Collector Alarm Output max. sink 60Vdc – 100mA (Monitor)
Control Input	Programmable Temperature or 0-10V (Control) Open Collector Fan Tachometer (Monitor)
Maximum Number of Fans	16 x EC Fans (10V – 1mA supply) 100 x EC Fans (12-48Vdc supply) *100 x DC Fans (12-48Vdc supply)
Operating Temperature	-30°C to +60°C

*multiple DC fans are not recommended due to the potential negative effect on the speed control in case of fan failure(s)

Accessories	
Thermistor lead	**SN1060 (included with the controller)**
Programming lead	**210-HAR11887**
Alarm lead	**210-HAR10579 (included with the controller)**

Installation

The CGC is designed as a component part to be installed in a clean and dry area within the user's equipment or an enclosure to prevent access whilst operating or the ingress of dust and moisture. There are 4 x Ø 3.5mm PCB fixing holes available for installing the board to its enclosure or fixture. It is recommended that the control signal cable is kept separate from mains supply wiring. Shielded cabling may be used if appropriate to prevent unwanted interference.

ebm-papst UK Ltd
Chelmsford Business Park Chelmsford Essex CM2 5EZ
Telephone: +44(0)1245468555 Fax: +44(0)1245466336
e-mail sales@uk.ebmpapst.com

Mechanical Outline & Connection Detail

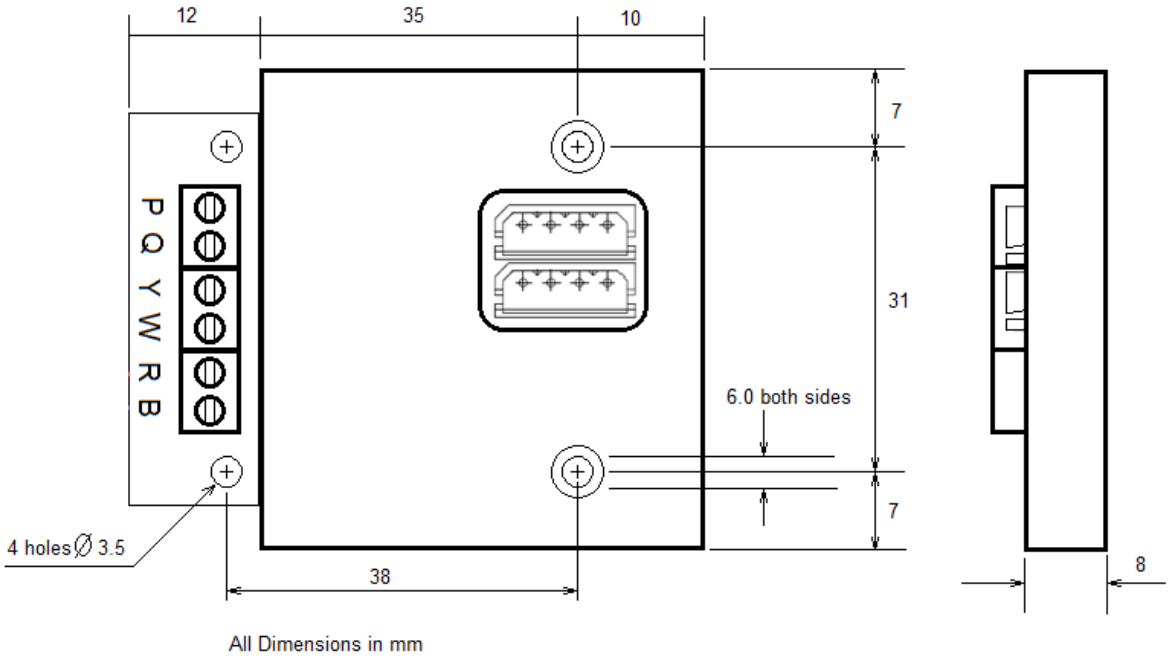

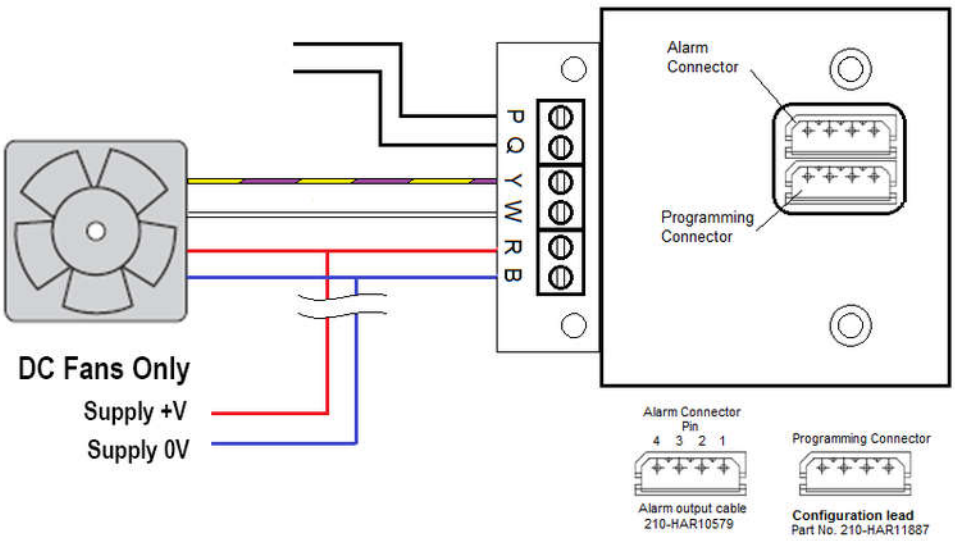

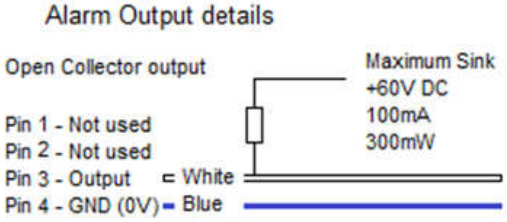

Connections

Terminal	Temperature Control Mode	0-10V control input Mode
P	Thermistor Connection +ve	0-10V control signal input
Q	Thermistor connection GND (0V)	GND (0V) control signal input
Y	Speed control output (User Configurable) - Open Collector PWM or Analogue 0-10V	
W	Open collector Tacho input	
R	10V or 12V to 57V DC supply	
B	GND (0V)	

Configuration and alarm connector:

4-way Molex connector mating half part number: 50-37-5043
Female Crimp 22-28AWG:
08-70-1039 (Reel)
08-70-1040 (Bag of 100)

Function

The CGC provides a speed signal output to control fans whose input is either open collector PWM or 0-10V DC analogue.

The controller is able to process inputs from a NTC thermistor or a 0-10V input and use it to control the output signal in order to regulate fan speed. The input/output response profile is modifiable using the ebm-papst graphical user interface software (GUI).

The GUI defines the input source (Temperature or Voltage), the fan speed response profile, among many other features and saves the details in a configuration file for immediate or later download to the controller.

Alternatively, ebm-papst provides a set of pre-made configuration files available at: www.ebmpapst.co.uk/cgc. The pre-made configuration files are derived from legacy CPC and EC controllers and must be used as their direct replacement.

For details on how to use the GUI to re-configure a controller, please refer to "CGC – Graphical User Interface Instructions" manual, available from www.ebmpapst.co.uk/cgc

Alarms

The alarm output is an open collector signal. A pull up resistor is required to provide a signal from the alarm pin. The alarm pin can sink up to 100 mA and accepts a maximum signal voltage of 60 V. The alarm active state (high or low) is programmable via the GUI software.

Alarm Conditions

The alarm will trigger under the following conditions:

- Thermistor open circuit – a break in the thermistor cable will cause an alarm, and the output to the fan will default to run the fan at maximum speed.
- Thermistor short circuit – A low resistance across the thermistor input terminals will cause an alarm, and the output to the fan will default to run the fan at maximum speed
- The thermistor readings exceed or fall behind a pre-programmed value or the 0V-10V input signal exceeds or fall behind a pre-programmed value
- The tacho signal registers a speed of less than 200rpm whilst target PWM is more than 10%

NOTE: For fans without a tacho output, the "Tacho Dependent Alarm" can be disabled in the GUI to avoid defaulting the controller to an alarm condition. This helps preserving temperature or voltage alarms when using the controller with fans that do not have a tacho output.

Monitor

A monitoring routine is available for the CGC via its graphical user interface. The routine monitors real-time the controller's input and output, and projects the results on the profile plot. For more information, please see "CGC – Graphical User Interface Instructions" manual, available from www.ebmpapst.co.uk/cgc

Transport and Storage

- PCBs should be transported in anti-static build-up bag or static dissipative bags.
- Store in a dry environment
- Storage temperature: -30°C to +70°C.

Maintenance and Servicing

There are no user serviceable parts.

CE Document – Copy of first sheet

ebmpapst

Part No - CGCXX0000

Certificate No - CGCXX0000CE

CE DECLARATION OF CONFORMITY		
Declaration We, ebm-papst UK Ltd, Chelmsford Business Park, Chelmsford, Essex CM2 5EZ certify that the product(s) listed are in conformity with;		
Electromagnetic Compatibility Directive 2014/30/EU		
	Declaration Approved	Technical File Compiled
Name	G. M. Lockwood	Felipe Pagliarini
Position	Technical Director	Electronic Design Engineer
Signature		
Date of Declaration	29-Sep-17	29-Sep-2017
Issue / Bug No	Issue 1	Issue 1
Part number:	CGCXX0000	
Description:	Configurable Generic Controller	
The product(s) have been assessed by the application of the following Standards; BS EN 61000-4-2 - Electromagnetic compatibility (EMC). Testing and measurement techniques. Electrostatic discharge immunity test. Contact Discharge through adjacent objects.		