Product datasheet

Specifications



inductive sensor XS8 40x40x117 - PBT - Sn20 mm - 12..48VDC - terminals

XS8C4A1PCP20

Main

Range of product	Telemecanique Inductive proximity sensors XS
Series name	General purpose
Sensor type	Inductive proximity sensor
Device application	Mobile equipment
Sensor name	XS8
Sensor design	Form 40 x 40 x 117
Size	117 mm
Body type	Fixed
Detector flush mounting acceptance	Flush mountable
Material	Plastic
Enclosure material	PBT
Type of output signal	Discrete
Wiring technique	4-wire
[Sn] nominal sensing distance	20 mm
Discrete output function	1 NO + 1 NC
Output circuit type	DC
Discrete output type	PNP
Electrical connection	Screw-clamp terminals, 4 x 1.5 mm²
[Us] rated supply voltage	12...48 V DC with reverse polarity protection
Switching capacity in mA	<= 200 mA with overload and short-circuit protection
IP degree of protection	IP67 conforming to IEC 60529 IP65 conforming to IEC 60529 IP69K conforming to DIN 40050

Complementary

Safety level	SIL 2 conforming to EN/IEC 61508 PL = d conforming to EN/ISO 13849-1 SILCL 2 conforming to IEC 62061
Safety reliability data	MTTFd = 1546 years PFHd = 7.4E-8 1/h SFF = 92 % DC = 75 % with appropriate safety controller

Disclaimer: This documentation is not intended as a substitute for and is not to be used for determining suitability or reliability of these products for specific user applications

Detection face	5 positions turret head
Front material	PBT
Operating zone	0…16 mm
Differential travel	3...15% of Sr
Repeat accuracy	<= 3% of Sr
Cable entry number	1 tapped entry for M20 x 1.5 cable gland
Status LED	Supply on: 1 LED (green) Output state: 1 LED (yellow)
Supply voltage limits	10…58 V DC
Switching frequency	<= 300 Hz
Maximum voltage drop	<2 V (closed)
Current consumption	0...15 mA no-load
Maximum delay first up	7.5 ms
Maximum delay response	1.2 ms
Maximum delay recovery	1.8 ms
Marking	CE
Height	40 mm
Length	40 mm
Width	117 mm
Net weight	0.244 kg

Environment

Product certifications	E2 CCC UL TÜV CSA
Ambient air temperature for operation	-25…70 °C
Ambient air temperature for storage	-40…85 °C
Vibration resistance	25 gn amplitude = +/- 2 mm (f = 10…55 Hz) conforming to IEC 60068-2-6
Shock resistance	50 gn for 11 ms conforming to EN 60068-2-27

Packing Units

Unit Type of Package 1	PCE
Number of Units in Package 1	1
Package 1 Weight	256.0 g
Package 1 Height	5 cm
Package 1 width	5 cm
Package 1 Length	14.5 cm
Unit Type of Package 2	S02
Number of Units in Package 2	14
Package 2 Weight	3.908 kg
Package 2 Height	15 cm
Package 2 width	30 cm
Package 2 Length	40 cm

Offer Sustainability

Sustainable offer status	Green Premium product
REACh Regulation	REACh Declaration
EU RoHS Directive	Pro-active compliance (Product out of EU RoHS legal scope) EU RoHS Declaration
Mercury free	Yes
RoHS exemption information	Yes
Environmental Disclosure	Product Environmental Profile

Contractual warranty

Warranty	18 months

Product datasheet XS8C4A1PCP20

Dimensions Drawings

Dimensions

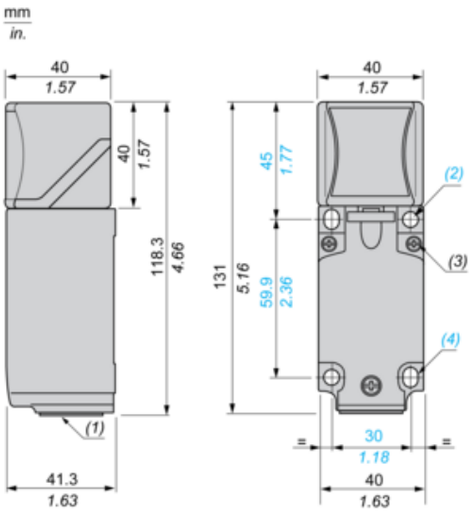

(1) : M20 x 1.5 cable gland.

(2) : 2 holes Ø 5,45 mm / Ø 0.21 in. Tightening torque: < 1,5 Nm / < 13.3 lb-in.

(3) : 3 screws M3,5. Tightening torque: < 1,2 Nm / < 10.6 lb-in.

(4) : 2 alongated holes 5,4 x 7,4 mm / 0.21 x 0.29 in. Tightening torque: < 1,5 Nm / < 13.3 lb-in".

Product datasheet XS8C4A1PCP20

Mounting and Clearance

Mounting

Head Positions

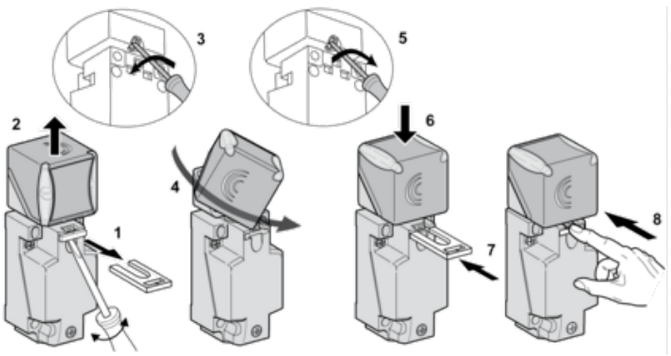

Product datasheet XS8C4A1PCP20

Mounting and Clearance

Setting-up Precautions

Minimum Mounting Distances (mm)

Side by Side

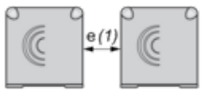

e (1) ≥ 80

Face to Face

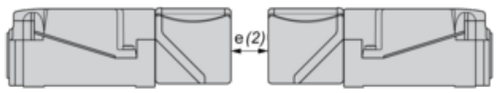

e (2) ≥ 160

Facing a Metal Object

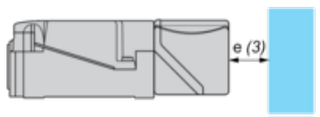

e (3) ≥ 60

Wiring Schemes

4-Wire DC

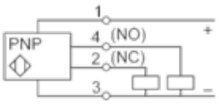

SIL 2 Wiring Scheme

With Preventa XPSMF40 Safety PLC

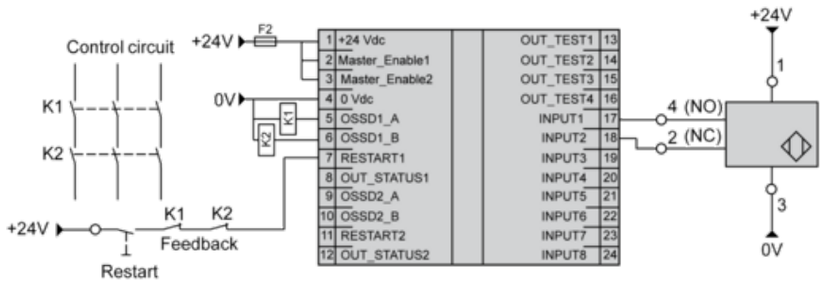

SFF : (Safe Failure Fraction): 92,68 %

DC : (Diagnosis Coverage): 75,8 %