

TOP VIEW

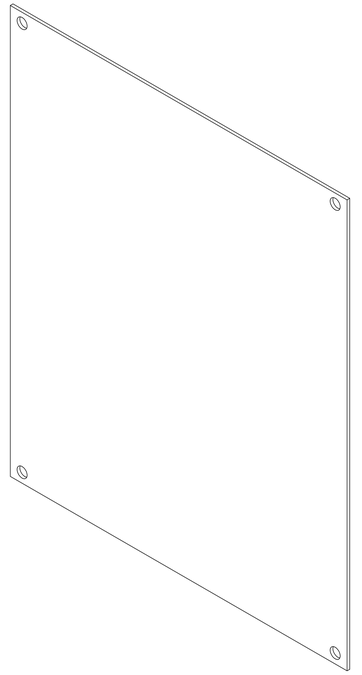

ISOMETRIC VIEW



SIDE VIEW

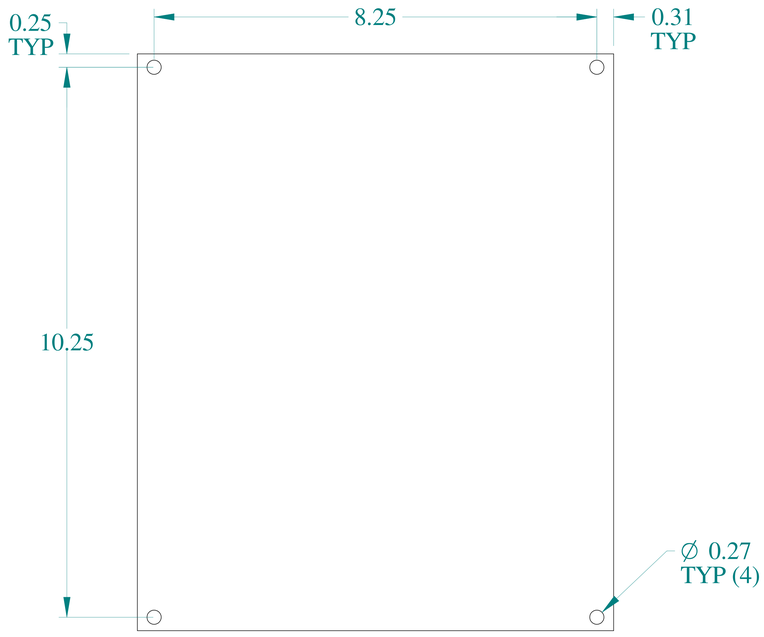

FRONT VIEW

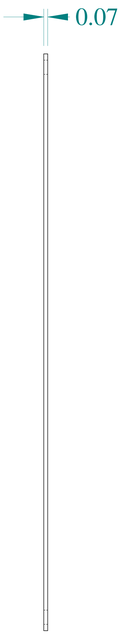

SIDE VIEW

HAMMOND MANUFACTURING®

www.hammondmfg.com

Data subject to change without notice.

Part # : 14R1109	Date : Jan. 31, 2020

Link:www.hammfg.com/14R1109