Brand of NTN corporation

Technical data

UCP308

Bearing units



Grey cast housing, radial insert ball bearing with socket set screws,seal with slinger

KIT CONTENT

UC308G2, P308

VISUAL (S)

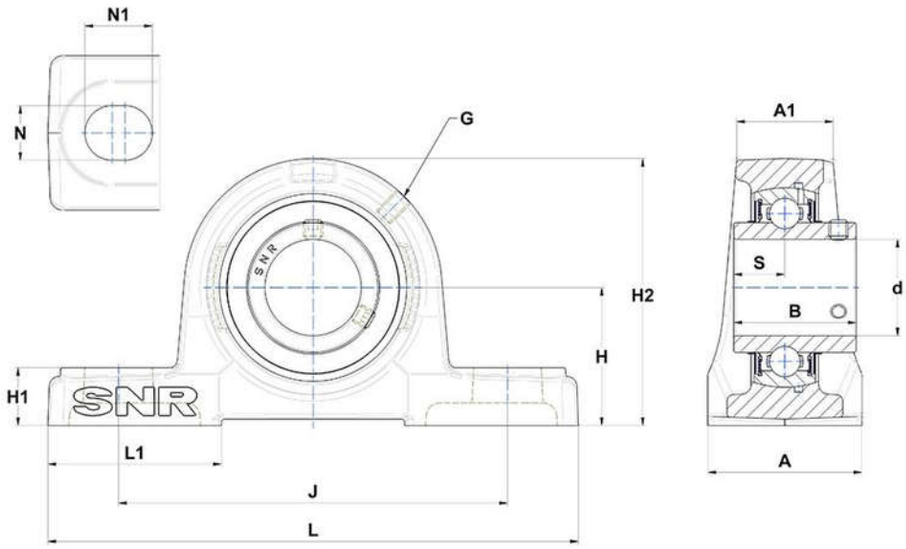

PRODUCT DEFINITION

Brand	SNR
A - Housing width	60 mm
A1 - Housing top width	42 mm
B - Width of Inner Ring	52 mm
d - Shaft diameter	40 mm
G - Grease fitting	M6x1

PRODUCT DEFINITION	
H - Distance mounting base to centerline spheric. seating diam.	60 mm
H1 - Housing foot height	22 mm
H2 - Housing height	116 mm
J - Mounting holes distance	170 mm
L - Housing length	220 mm
L1 - Housing foot length	60 mm
N - Mounting hole dimension	17 mm
N1 - Mounting hole length	27 mm
S - Distance front side/bearing centre	19 mm

PRODUCT PERFORMANCE	
C - Dynamic load rating	40560000 mN
C0 - Static load rating	24000000 mN
Operating temperature min.	253,15 °K
Operating temperature max.	373,15 °K

OTHER FEATURES	
Mass	3,36 kg
Recommended tightening torque for set screw	22 N-m