Brand of NTN corporation

Technical data

1202G15C3

Double-row self-aligning ball bearings



Self-aligning ball bearing, polyamide cage, open

VISUAL (S)

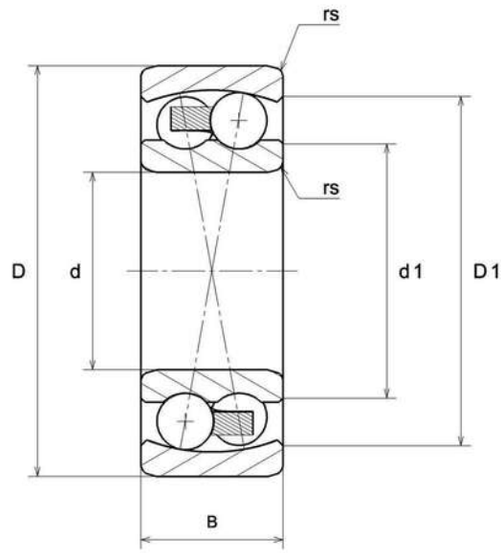

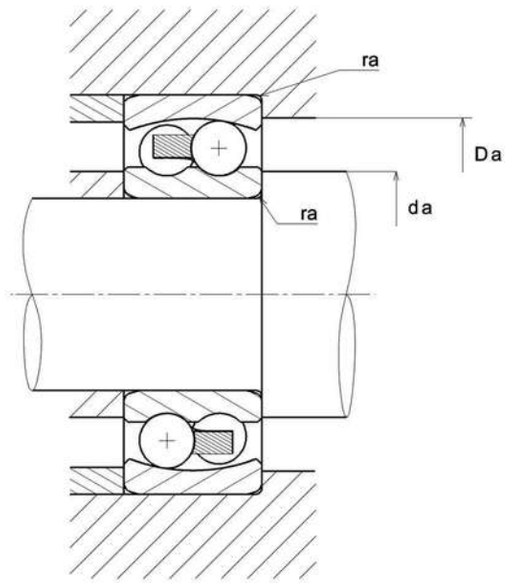

NTN Europe
1 rue des Usines · BP 2017 · 74010 Annecy Cedex · France · Tel. +33 (0)4 50 65 30 00
S.A. au capital de 322 639 919 € · RCS ANNECY B 325 821 072 · Id. Fiscale : FR 48 325 821 072
SIRET 325 821 072 00015 · Code APE 2815 Z · Code NACE 28.15

1202G15C3
Double-row self-aligning ball bearings

PRODUCT DEFINITION	
Brand	SNR
d - Internal diameter	15 mm
D - External diameter	35 mm
B - Bearing/Inner ring width	11 mm
d1 - External diameter inner ring	20,2 mm
D1 - Inner diameter outer ring	28,8 mm
rs - Min fillet radius	0,6 mm
Radial clearance class	C3
Precision class	P0
Mass	0,049 kg

PRODUCT PERFORMANCE	
C - Dynamic load	7500000 mN
C0 - Static load	1750000 mN
Cu - Fatigue limit load	80000 mN
e - Coefficient	0.34
Y0 - Static axial load coefficient	1.95
Y1 - Lower axial load coefficient	1.86
Y2 - Upper axial load coefficient	2.89
N ref - Reference thermal speed	108000 °/s
N lim - Mechanical Limit Speed	168000 °/s
Tmin - Min operating temperature	253,15 °K
Tmax - Max operating temperature	393,15 °K

BEARING FREQUENCIES	
BPFO - Over rolling frequency on outer ring (60 rpm)	3.89 Hz
BPFI - Over rolling frequency on inner (60 rpm)	6.11 Hz
BSF - Over rolling frequency on rolling element (60 rpm)	4.179 Hz
BRF - Rotational frequency – rolling element (60 rpm)	2.09 Hz
FTF - Rotational frequency - cage (60 rpm)	0.389 Hz

ABUTMENT	
da min - Min shoulder diameter IR	19 mm
Da max - Max shoulder diameter OR	31 mm
ra max - Max shaft & housing fillet radius	0,6 mm