MURR ELEKTRONIK
stay connected

EXACT12, 8XM12, 5-POLE, MOULDED CABLE

10.0m PUR/PVC 16x0,34+3X0.75, UL/CSA

8-way, 5-pole
PUR/PVC
Further cable lengths on request.
10.0 m
Plastic housings with good resistance against chemicals and oils.
The resistance to aggressive media should be individually tested for your application. Further details on request.

Link to Product

Illustration



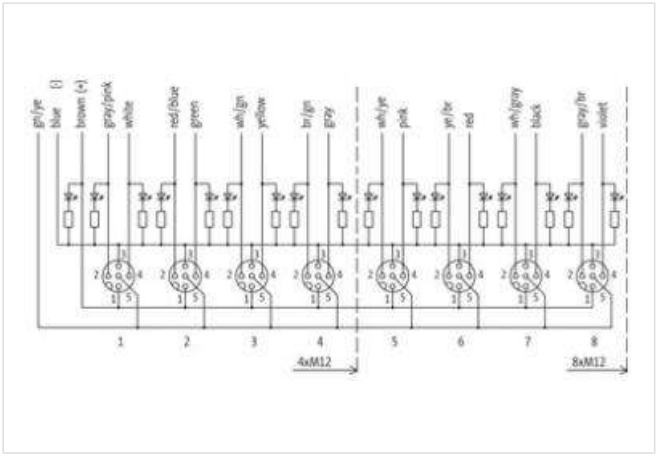

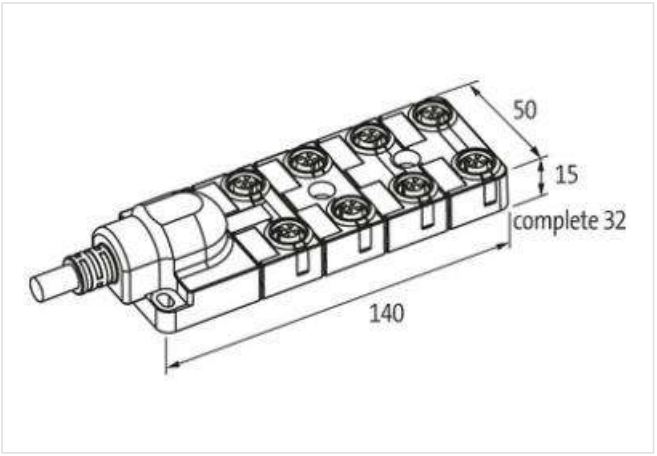

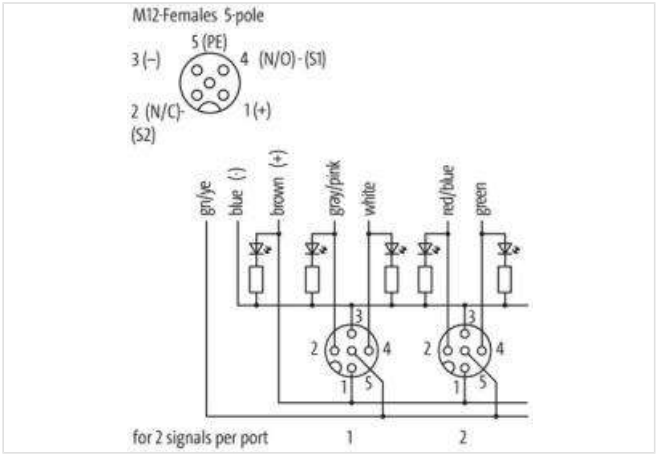

Product may differ from Image

Commercial data

ECLASS-6.0	27143423
ECLASS-6.1	27279219
ECLASS-7.0	27279219
ECLASS-8.0	27279219

The information in this Product-PDF has been compiled with the utmost care.
Liability for the correctness completeness and topicality of the information is restricted to gross negligence. Version: 2024-01-31

MURR ELEKTRONIK
stay connected

ECLASS-9.0	27440108
ECLASS-10.1	27440108
ECLASS-11.1	27440108
ECLASS-12.0	27440108
ETIM-5.0	EC002585
customs tariff number	85444290
GTIN	4048879054010
Packaging unit	1
Electrical data | Supply	
Operating voltage DC	24 V
Current operating per contact max.	4 A
Installation | Connection	
Mounting set	M12 x 1
Device protection | Electrical	
Degree of protection (EN IEC 60529)	IP65, IP67
Device protection | Media	
Flame resistance	flame retardant
Mechanical data | Material data	
Material housing	Plastic
Mechanical data | Mounting data	
Mounting method	Schraubgewinde
Environmental characteristics | Climatic	
Operating temperature min.	-20 °C
Operating temperature max.	70 °C
Additional condition temperature range	depending on cable quality
Cable	
No./diameter of wires	16× 0.34 + 3× 0.75 mm²
Wire isolation	PVC
C-track properties	2 Mio.
Outer Ø	10.0 mm ±5%
Cable identification	398
Cable Type	2 (PUR/PVC)
Cable number	398
Approval (cable)	UL (AWM-Style 21441/10955), CE conform
Cable weight [g/m]	165 g
Material wire	Cu wire, bare
Resistor (core)	max. 57 Ω/km (0.34 mm²), max. 26 Ω/km (0.75 mm²); (20 °C)
Single wire Ø (core)	0.15 mm
Construction (core)	19× 0.15 mm (0.34 mm²); 42× 0.15 mm (0.75 mm²); (multi-strand wire class 5/6)
Diameter (core)	16× 0.34 + 3× 0.75 mm²
AWG	similar to AWG 22 (0.34 mm²); similar to AWG 19 (0.75 mm²)
Material wire isolation	PVC
Material property wire insulation	CFC-, cadmium-, silicone- and lead-free
Shore hardness wire isolation	43 ±5 D
Wire-Ø incl. isolation	1.3 mm ±5% (0.34 mm²); 1.8 mm ±5% (0.75 mm²)
Color/numbering of wires	wh, grpk, brgn, ye, whgn, gn, rdbl, vi, grbr, bk, whgr, rd, yebr, pk, whye, gr+bl, br, gnye longitudinally striped
Shield	no
Material jacket	PUR/PVC
Shore hardness jacket	87 ±5 A
Outer-Ø (jacket)	10.0 mm ±5%
Color jacket	gray

The information in this Product-PDF has been compiled with the utmost care.
Liability for the correctness completeness and topicality of the information is restricted to gross negligence. Version: 2024-01-31

Jacket Color	gray
chemical resistance	good resistance to oil, gasoline and chemicals (EN 60811-404)
Nominal voltage	U0/U 300/300 V AC
Test voltage	2000 V AC
Current load capacity	to DIN VDE 0298-4
Temperature range (fixed)	-30...+80 °C
Temperature range (mobile)	-5...+60 °C
Bend radius (fixed)	5× outer Ø
Bend radius (moving)	10× outer Ø
Bend radius (moving)	10× outer Ø
No. of bending cycles (C-track)	max. 2 Mio. (25 °C)
Travel speed (C-track)	max. 2 m/s
Acceleration (C-track)	max. 10 m/s²
Material jacket	PUR/PVC (UL/CSA)
Connection type 2	
Family construction form	free cable end
No. of poles	19
Family construction form	M12
Gender	female
Color contact carrier	black
Coding	A
No. of poles	5
PIN 1	+
PIN 2	NC S 2
PIN 3	-
PIN 4	NO S 1
PIN 5	PE

The information in this Product-PDF has been compiled with the utmost care.
Liability for the correctness completeness and topicality of the information is restricted to gross negligence. Version: 2024-01-31