TIMKEN

The Timken Company
4500 Mt Pleasant St. NW
N. Canton, OH 44720
Phone: (234) 262-3000
E-Mail: CustomerCAD@timken.com • **Web site:** www.timken.com

Timken Part Number 497A - 492A, Tapered Roller Bearings - TS (Tapered Single) Imperial

This is the most basic and most widely used type of tapered roller bearing. It consists of two main separable parts: the cone (inner ring) assembly and the cup (outer ring). It is typically mounted in opposing pairs on a shaft.



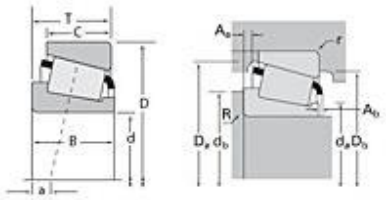

Specifications | Dimensions | Abutment and Fillet Dimensions | Basic Load Ratings | Factors

Specifications

Series	495
Cone Part Number	497A
Cup Part Number	492A
Design Units	Imperial
Bearing Weight	3.00 lb 1.400 Kg
Cage Type	Stamped Steel

Dimensions

d - Bore	3.3750 in 85.725 mm
D - Cup Outer Diameter	5.2500 in 133.350 mm

B - Cone Width	1.1720 in 29.769 mm
C - Cup Width	0.8750 in 22.225 mm
T - Bearing Width	1.1876 in 30.165 mm

Abutment and Fillet Dimensions

R - Cone Backface "To Clear" Radius[1]	0.25 in 6.35 mm
r - Cup Backface "To Clear" Radius[2]	0.130 in 3.30 mm
da - Cone Frontface Backing Diameter	4.43 in 92.96 mm
db - Cone Backface Backing Diameter	4.13 in 104.90 mm
Da - Cup Frontface Backing Diameter	5.08 in 129.00 mm
Db - Cup Backface Backing Diameter	4.72 in 119.89 mm
Ab - Cage-Cone Frontface Clearance	0.12 in 3 mm
Aa - Cage-Cone Backface Clearance	0.07 in 1.8 mm
a - Effective Center Location[3]	-0.03 in -0.80 mm

Basic Load Ratings

C90 - Dynamic Radial Rating (90 million revolutions)[4]	9000 lbf 40000 N
C1 - Dynamic Radial Rating (1 million revolutions)[5]	34700 lbf 154000 N
C0 - Static Radial Rating	48600 lbf 216000 N
C_{a90} - Dynamic Thrust Rating (90 million revolutions)[6]	6850 lbf 30500 N

Factors

K - Factor[7]	1.31
e - ISO Factor[8]	0.44
Y - ISO Factor[9]	1.35
G1 - Heat Generation Factor (Roller-Raceway)	104.6
G2 - Heat Generation Factor (Rib-Roller End)	29.3
Cg - Geometry Factor	0.125

[1] These maximum fillet radii will be cleared by the bearing corners.
[2] These maximum fillet radii will be cleared by the bearing corners.
[3] Negative value indicates effective center inside cone backface.
[4] Based on 90 x 10^6 revolutions L_{10} life, for The Timken Company life calculation method. C_{90} and C_{a90} are radial and thrust values.
[5] Based on 1 x 10^6 revolutions L_{10} life, for the ISO life calculation method.
[6] Based on 90 x 10^6 revolutions L_{10} life, for The Timken Company life calculation method. C_{90} and C_{a90} are radial and thrust values for a single-row, $C_{90(2)}$ is the two-row radial value.
[7] These factors apply for both inch and metric calculations. Consult your Timken representative for instruction on use.
[8] These factors apply for both inch and metric calculations. Consult your Timken representative for instruction on use.
[9] These factors apply for both inch and metric calculations. Consult your Timken representative for instruction on use.

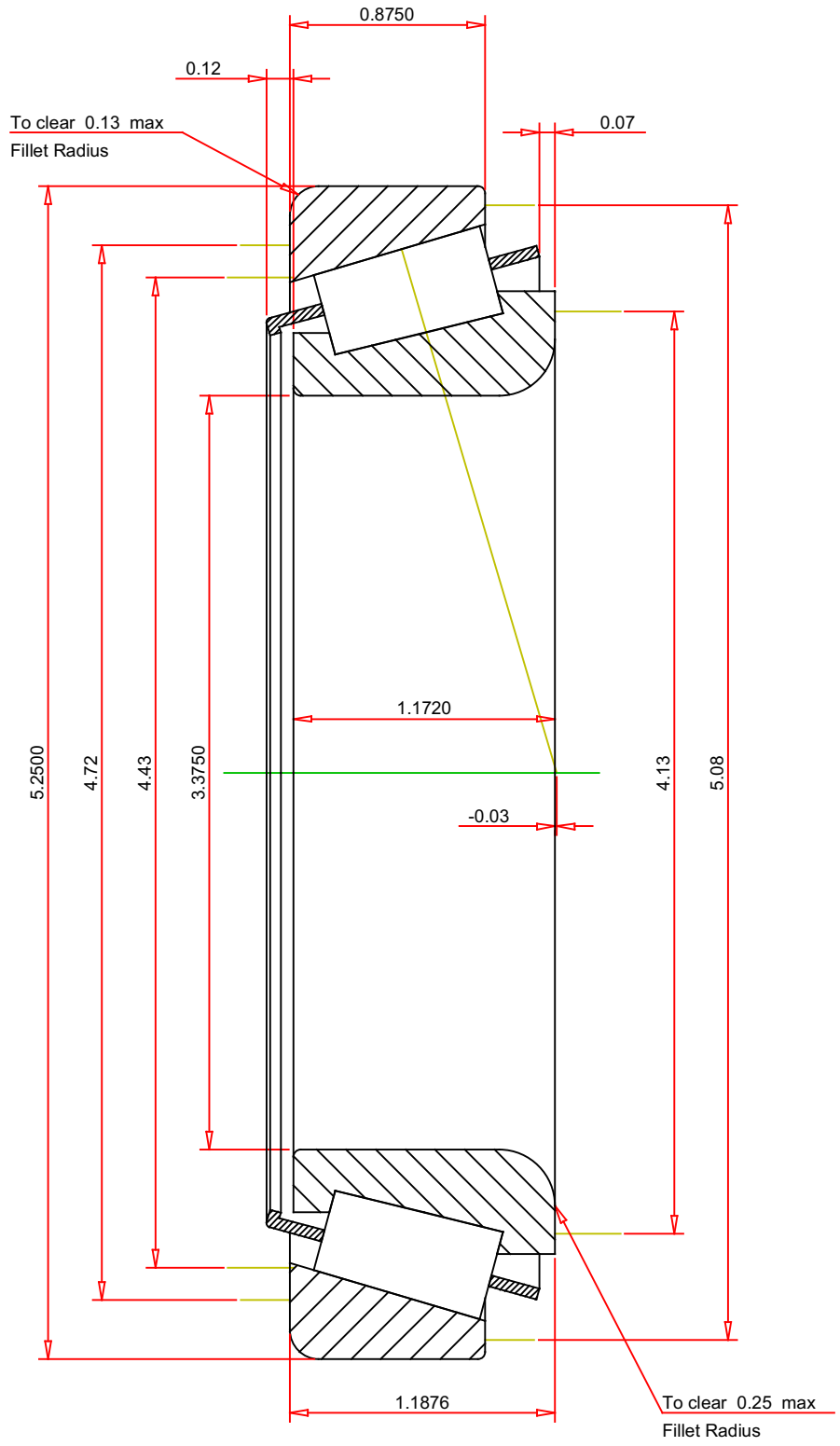

IMPERIAL UNITS

ISO Factor - e	0.44	
ISO Factor - Y	1.35	
Bearing Weight	3	lb
Number of Rollers Per Row	23	
Effective Center Location	-0.03	inch

TIMKEN®

THE TIMKEN COMPANY
NORTH CANTON, OHIO USA

497A - 492A
TS BEARING ASSEMBLY

K Factor	1.31	
Dynamic Radial Rating - C90	9000	lbf
Dynamic Thrust Rating - Ca90	6850	lbf
Static Radial Rating - C0	48600	lbf
Dynamic Radial Rating - C1	34700	lbf

Every reasonable effort has been made to ensure the accuracy of the information contained in this writing, but no liability is accepted for errors, omissions or for any other reason.

FOR DISCUSSION ONLY