WWW.TENGTOOLS.COM



53" PRO35™ ROLLER CABINET TOOL KIT 615 PIECES RED

- **53" PRO35™ roller cabinet containing a 615-piece tool kit for industrial professionals**
- **Nine fully extendable drawers in various sizes, each with ball-bearing slides and a noise-reducing EVA mat for protection**
- **Roller cabinet features 3-piece heavy gauge steel construction**
- **Powder coated and treated with a phosphate-free 5-step rust prevention process for long lasting performance**
- **Equipped with an 18mm laminated MDF worktop and 6" heavy duty swivel castors**
- **Includes a wide range of tools for industrial work, organised into dedicated modules that are part of the TengTools Tool Control System**

The TengTools 53" PRO35™ roller cabinet tool kit TKW53R615T in matte red is crafted to fulfill the needs of industry professionals. The toolkit includes 615 durable pieces with a variety that makes it an asset in a wide range of industrial environments. The core component of the tool kit is the TSW53R9 roller cabinet, which measures 1350 mm in width, 460 mm in depth, and 813 mm in height, extending to 983 mm with castors. Its nine fully extendable drawers provides ample storage space. Six of the drawers are 75 mm high, two drawers are 154 mm high and the larger top drawer has a height of 160 mm for larger items. Each drawer can support up to 40 kg. The tool kit is equipped with a diverse array of tools essential for industrial work, including 1/4, 3/8, 1/2, and 3/4 drive sockets, bit sockets, ratchets, impact tools, combination spanners, screwdrivers, bits, T-handle hex & tx keys, pliers, inch spanners, inch sockets, pullers, and other general tools. These tools are meticulously organized in dedicated modules as part of the TengTools Tool Control System, ensuring an orderly workspace and facilitating the quick identification of any missing or left-behind tools. The 3-piece heavy gauge steel frame construction of the cabinet guarantees its ability to withstand the rigors of industrial use. It is further reinforced with a 5-step phosphate-free rust prevention process. Each drawer is fitted with ball bearing slides and is lined with an EVA mat to protect the tools and reduce noise. For easy movement and stability, the roller cabinet has been fitted with four heavy-duty 6" swivel castors, two of which are braked. A 3-digit combination lock makes it harder for unauthorised people to gain access to the tools inside. The roller cabinet has holes on both sides for mounting accessories, providing increased customisation options. A paper holder (TCA08) is included in the tool kit, as well as an 18 mm thick laminate MDF worktop that provides a durable and practical work surface.

General information

Country of origin: Taiwan
Barcode: 5020385215528
Tarriff code Europe: 8206000000
ECCN US: EAR99
UNSPSC: 27113201

Dimensions

Net weight (g): 213430
Width (mm): 1350
Depth (mm): 460
Height (mm): 993
Height with castors (mm): 993
Max static load: 1340 kg
Max dynamic load: 840 kg
Number of drawer: 9
Drawer capacity: 9 × 40 kg
Drawer depth: 9 × 380 mm
Drawer height: 6 × 75 mm, 2 × 154 mm, 1 × 160 mm
Drawer width: 8 × 575 mm, 1 × 1215 mm

Attributes

Product type: Mobile Tool Kits
User segment: Industry
Number of pieces: 615
Inlay material: PS
Colour: Red
Castor size: 6" x 2"
Swivel castors: 2
Braked swivel castors: 2
Type of work top: 18 mm laminated MDF

Features



Technical changes and errors may occur. 01-08-2024 20:00

DESIGNED IN SWEDEN

TengTools is a Swedish company present in more than 30 markets worldwide, and offers hand tools in smart storage solutions for demanding professionals within the automotive, maintenance and engineering sectors, as well as motor sport enthusiasts who aspire to use the same tools as top mechanics across the globe.

TENGTOOLS
Sandbergsvägen 3
441 39 Alingsås, Sweden

SPARE PART LIST

TSW53R9
Version: 3

WWW.TENGTOOLS.COM

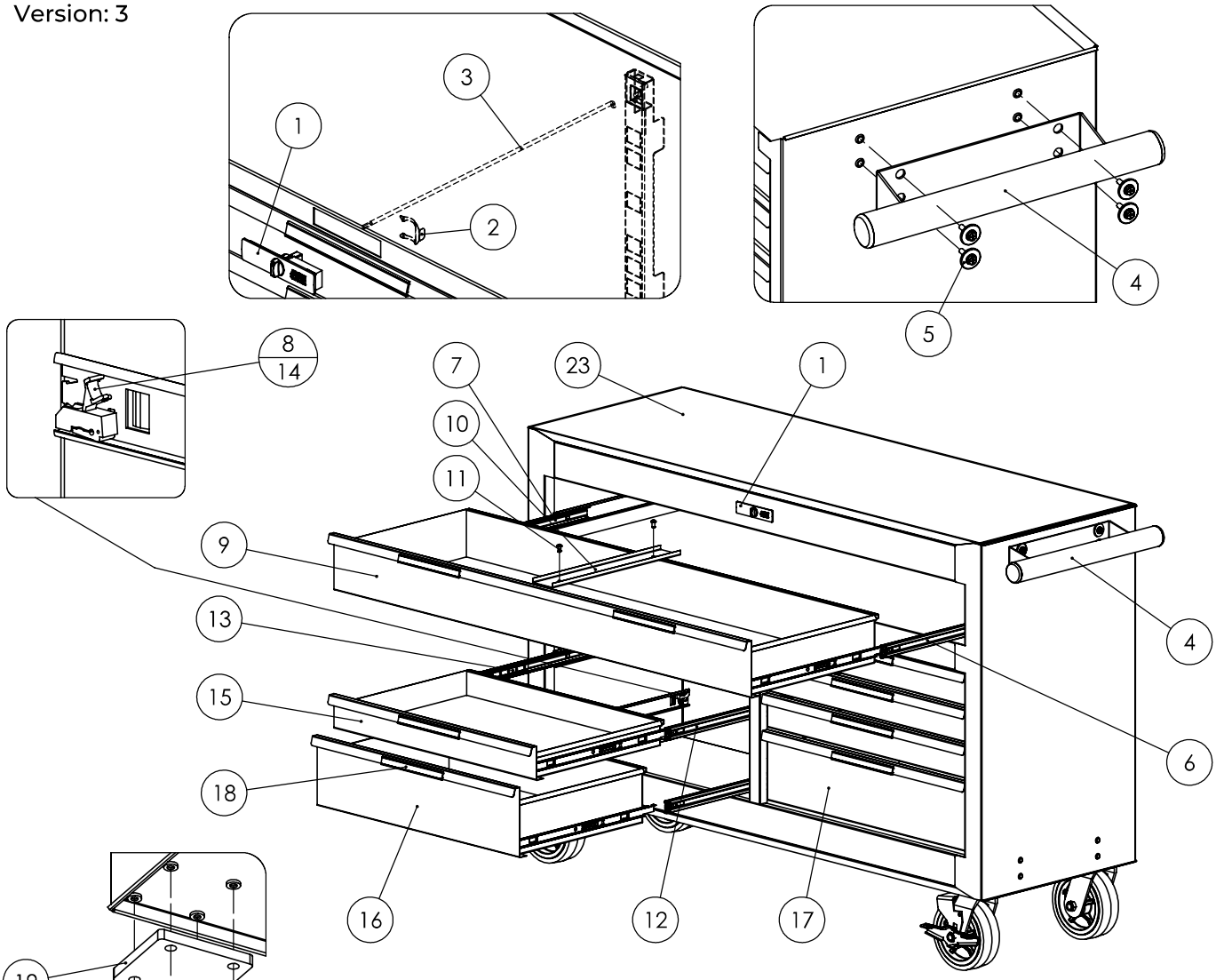

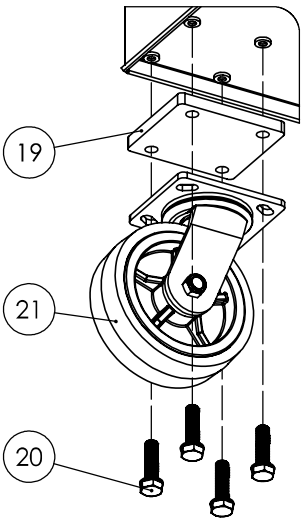

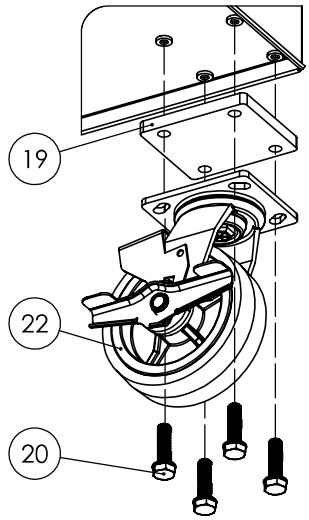

POS	DESCRIPTION	ITEM ID
1A	Combination lock 180°	TC-180CLOCK
1B	Key cylinder lock 180° (optional)	TC-180KEYLOCK
2	Cam for lock (included in Pos 1)	TCW806N-02
3	Locking bar	TCW603-01
4	Side handle	TCW807NBK1-14
5	Screws for side handle (4pcs)	TCW603-08
6	Slider 16" 51 mm Right (1pc)	TCW713-18
7	Slider 16" 51 mm Left (1pc)	TCW713-19
8	Clip for sliders (included in Pos 6 & 7)	TCW806LN-19
9	Drawer 1215 x 380 x 160 mm Red	TSW53R-160
10	Divider for 53" drawer	TCW809N-18
11	Screws for divider 53" drawer	TCW809N-19
12	Slider 16" 36 mm Right (1pc)	TCW810N-05
13	Slider 16" 36 mm Left (1pc)	TCW810N-06
14	Clip for sliders 36 mm (included in Pos 14 & 15)	TCW807N-16
15	Drawer 575 x 380 x 75 mm Red	TSW26R-75
16	Drawer 575 x 380 x 154 mm Red with Logo	TSW26RF-150
17	Drawer 575 x 380 x 154 mm Red	TSW25R-150
18A	Aluminium drawer handle (3 pcs)	ALUE803
18B	Aluminium drawer handle (4 pcs)	ALUE804
19	Plastic spacer for caster 12 mm (1 pc)	TCW806LN-03
20	Screws for casters (4 pcs)	TCW806LN-08
21	Swivel casters 6" x 2" (1 pc)	TCW713-12
22	Swivel casters with brake 6" x 2" (1 pc)	TCW713-11
23	1340 x 454 x 18 MDF Worktop	TC-TB06

ADDITIONAL IMAGES









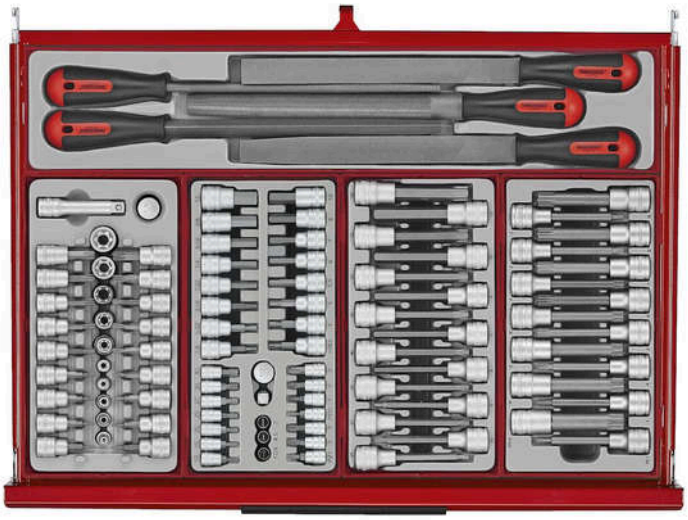











LIST OF CONTENTS

TKW53R615T 53" PRO35™ roller cabinet tool kit 615 pieces red

TCA08 Paper roll holder for side handle

TSW53R9 53" PRO35™ roller cabinet 9 drawers red

TT1205 1/2" Ratchet & Accessories Set TT1 5 Pieces

1200-72U 1/2" Ratchet 72 Teeth IP5X

M120021-C 1/2" Extension Bar 125 mm

M120022-C 1/2" Extension Bar 255 mm

M120030-C 1/2" Universal Joint

M380036-C Step Up Adaptor 3/8"F - 1/2"M

TT1215AF 1/2" Socket Set 12 pt AF TT1 15 Pieces

M120112-C 1/2" Socket 12 pt AF 3/8"

M120114-C 1/2" Socket 12 pt AF 7/16"

M120116-C 1/2" Socket 12 pt AF 1/2"

M120118-C 1/2" Socket 12 pt AF 9/16"

M120120-C 1/2" Socket 12 pt AF 5/8"

M120122-C 1/2" Socket 12 pt AF 11/16"

M120124-C 1/2" Socket 12 pt AF 3/4"

M120126-C 1/2" Socket 12 pt AF 13/16"

M120128-C 1/2" Socket 12 pt AF 7/8"

M120130-C 1/2" Socket 12 pt AF 15/16"

M120132-C 1/2" Socket 12 pt AF 1"

M120134-C 1/2" Socket 12 pt AF 1-1/16"

M120136-C 1/2" Socket 12 pt AF 1-1/8"

M120138-C 1/2" Socket 12 pt AF 1-3/16"

M120140-C 1/2" Socket 12 pt AF 1-1/4"

TT1217-6 1/2" Socket Set 6 pt TT1 17 Pieces

M1205106-C 1/2" Socket 6 pt Metric 10 mm

M1205116-C 1/2" Socket 6 pt Metric 11 mm

M1205126-C 1/2" Socket 6 pt Metric 12 mm

M1205136-C 1/2" Socket 6 pt Metric 13 mm

M1205146-C 1/2" Socket 6 pt Metric 14 mm

M1205156-C 1/2" Socket 6 pt Metric 15 mm

M1205166-C 1/2" Socket 6 pt Metric 16 mm

M1205176-C 1/2" Socket 6 pt Metric 17 mm

M1205186-C 1/2" Socket 6 pt Metric 18 mm

M1205196-C 1/2" Socket 6 pt Metric 19 mm

M1205206-C 1/2" Socket 6 pt Metric 20 mm

M1205216-C 1/2" Socket 6 pt Metric 21 mm

M1205226-C 1/2" Socket 6 pt Metric 22 mm

M1205246-C 1/2" Socket 6 pt Metric 24 mm

M1205276-C 1/2" Socket 6 pt Metric 27 mm

WWW.TENGTOOLS.COM

M1205306-C	1/2" Socket 6 pt Metric 30 mm
M1205326-C	1/2" Socket 6 pt Metric 32 mm

TT1236 Combination Spanner Set TT1 12 Pieces

600508	Combination Spanner Metric 8 mm
600509	Combination Spanner Metric 9 mm
600510	Combination Spanner Metric 10 mm
600511	Combination Spanner Metric 11 mm
600512	Combination Spanner Metric 12 mm
600513	Combination Spanner Metric 13 mm
600514	Combination Spanner Metric 14 mm
600515	Combination Spanner Metric 15 mm
600516	Combination Spanner Metric 16 mm
600517	Combination Spanner Metric 17 mm
600518	Combination Spanner Metric 18 mm
600519	Combination Spanner Metric 19 mm

TT1435 1/4" Socket Set 6 pt TT1 35 Pieces

1400-72U	1/4" Ratchet 72 Teeth IP5X
FL2508A03	1/4" Flat Bits 25 mm 0.8 × 4.0 mm
FL2508B03	1/4" Flat Bits 25 mm 0.8 × 5.5 mm
HEX2500503	1/4" Hex Bits 25 mm 5 mm
HEX2500603	1/4" Hex Bits 25 mm 6 mm
M140015-C	1/4" Spinner Handle
M140020-C	1/4" Extension Bar 50 mm
M140021-C	1/4" Extension Bar 100 mm
M140030-C	1/4" Universal Joint
M140060-C	1/4" Bit Adaptor Hex Bit Coupler
M140504-C	1/4" Socket 6 pt Metric 4 mm
M140505-C	1/4" Socket 6 pt Metric 5 mm
M1405055-C	1/4" Socket 6 pt Metric 5.5 mm
M140506-C	1/4" Socket 6 pt Metric 6 mm
M140507-C	1/4" Socket 6 pt Metric 7 mm
M140508-C	1/4" Socket 6 pt Metric 8 mm
M140509-C	1/4" Socket 6 pt Metric 9 mm
M140510-C	1/4" Socket 6 pt Metric 10 mm
M140511-C	1/4" Socket 6 pt Metric 11 mm
M140512-C	1/4" Socket 6 pt Metric 12 mm
M140513-C	1/4" Socket 6 pt Metric 13 mm
M140606-C	1/4" Deep Socket 6 pt Metric 6 mm
M140607-C	1/4" Deep Socket 6 pt Metric 7 mm
M140608-C	1/4" Deep Socket 6 pt Metric 8 mm
M140610-C	1/4" Deep Socket 6 pt Metric 10 mm
M140612-C	1/4" Deep Socket 6 pt Metric 12 mm
M140613-C	1/4" Deep Socket 6 pt Metric 13 mm

M380035-C Reducing Adaptor 3/8"F - 1/4"M

PH2500103 1/4" PH Bits 25 mm PH1

PH2500203 1/4" PH Bits 25 mm PH2

PZ2500103 1/4" PZ Bits 25 mm PZ1

PZ2500203 1/4" PZ Bits 25 mm PZ2

TPX2501003 1/4" TPX Bits 25 mm TPX10

TPX2501503 1/4" TPX Bits 25 mm TPX15

TPX2502003 1/4" TPX Bits 25 mm TPX20

TT3592 Combination Spanner Set AF TT1 8 Pieces

600110 Combination Spanner AF 5/16"

600112 Combination Spanner AF 3/8"

600114 Combination Spanner AF 7/16"

600116 Combination Spanner AF 1/2"

600118 Combination Spanner AF 9/16"

600120 Combination Spanner AF 5/8"

600122 Combination Spanner AF 11/16"

600124 Combination Spanner AF 3/4"

TT3816 3/8" Socket Set 6 pt TT1 16 Pieces

M380607-C 3/8" Deep Socket 6 pt Metric 7 mm

M380608-C 3/8" Deep Socket 6 pt Metric 8 mm

M380609-C 3/8" Deep Socket 6 pt Metric 9 mm

M380610-C 3/8" Deep Socket 6 pt Metric 10 mm

M380611-C 3/8" Deep Socket 6 pt Metric 11 mm

M380612-C 3/8" Deep Socket 6 pt Metric 12 mm

M380613-C 3/8" Deep Socket 6 pt Metric 13 mm

M380614-C 3/8" Deep Socket 6 pt Metric 14 mm

M380615-C 3/8" Deep Socket 6 pt Metric 15 mm

M380616-C 3/8" Deep Socket 6 pt Metric 16 mm

M380617-C 3/8" Deep Socket 6 pt Metric 17 mm

M380618-C 3/8" Deep Socket 6 pt Metric 18 mm

M380619-C 3/8" Deep Socket 6 pt Metric 19 mm

M380620-C 3/8" Deep Socket 6 pt Metric 20 mm

M380621-C 3/8" Deep Socket 6 pt Metric 21 mm

M380622-C 3/8" Deep Socket 6 pt Metric 22 mm

TT3819 3/8" Socket Set 6 pt TT1 19 Pieces

3800-72U 3/8" Ratchet 72 Teeth IP5X

M120036-C Reducing Adaptor 1/2"F - 3/8"M

M380020W-C 3/8" Wobble Extension Bar 75 mm

M380030-C 3/8" Universal Joint

M380060-C 3/8" Bit Adaptor Hex bit coupler 1/4" Hex

M380508-C 3/8" Socket 6 pt Metric 8 mm

M380509-C 3/8" Socket 6 pt Metric 9 mm

M380510-C 3/8" Socket 6 pt Metric 10 mm

M380511-C 3/8" Socket 6 pt Metric 11 mm

M380512-C 3/8" Socket 6 pt Metric 12 mm

M380513-C 3/8" Socket 6 pt Metric 13 mm

M380514-C 3/8" Socket 6 pt Metric 14 mm

M380515-C 3/8" Socket 6 pt Metric 15 mm

M380516-C 3/8" Socket 6 pt Metric 16 mm

M380517-C 3/8" Socket 6 pt Metric 17 mm

M380518-C 3/8" Socket 6 pt Metric 18 mm

M380519-C 3/8" Socket 6 pt Metric 19 mm

M380522-C 3/8" Socket 6 pt Metric 22 mm

PT3810R 3/8" Rotating Spinner Handle

TT440Q Plier Set Vinyl Grip Q TT1 4 Pieces

MB441-6 Side Cutting Plier 160 mm

MB452-7 Heavy Duty Combination Plier 185 mm

MB461-8 Long Nose Plier 200 mm

MB482-10Q Quick Set Water Pump Plier HRC60 250 mm

TT474-7E Circlip Plier Set PRO 19-60 mm TT1 4 Pieces

MBE470-7 Circlip Plier Inner Straight PRO 175 mm

MBE471-7 Circlip Plier Inner Bent PRO 175 mm

MBE472-7 Circlip Plier Outer Straight PRO 175 mm

MBE473-7 Circlip Plier Outer Bent PRO 165 mm

TT6508R Ratcheting Combination Spanner Set R TT1 8 Pieces

600508R Ratcheting Combination Spanner Metric R 8 mm

600510R Ratcheting Combination Spanner Metric R 10 mm

600511R Ratcheting Combination Spanner Metric R 11 mm

600512R Ratcheting Combination Spanner Metric R 12 mm

600513R Ratcheting Combination Spanner Metric R 13 mm

600514R Ratcheting Combination Spanner Metric R 14 mm

600517R Ratcheting Combination Spanner Metric R 17 mm

600519R Ratcheting Combination Spanner Metric R 19 mm

TT9120DN 1/2" Impact Socket Set DIN TT1 20 Pieces

920513N 1/2" Impact Socket DIN Metric 13 mm

920515N 1/2" Impact Socket DIN Metric 15 mm

920516N 1/2" Impact Socket DIN Metric 16 mm

920517N1 1/2" Impact Socket DIN Metric 17 mm

920518N 1/2" Impact Socket DIN Metric 18 mm

920519N1 1/2" Impact Socket DIN Metric 19 mm

920522N 1/2" Impact Socket DIN Metric 22 mm

920524N 1/2" Impact Socket DIN Metric 24 mm

920613N 1/2" Deep Impact Socket DIN Metric 13 mm

920615N 1/2" Deep Impact Socket DIN Metric 15 mm

920616N 1/2" Deep Impact Socket DIN Metric 16 mm

920617N 1/2" Deep Impact Socket DIN Metric 17 mm

920618N 1/2" Deep Impact Socket DIN Metric 18 mm

920619N 1/2" Deep Impact Socket DIN Metric 19 mm

920622N 1/2" Deep Impact Socket DIN Metric 22 mm

920624N 1/2" Deep Impact Socket DIN Metric 24 mm

O92194 Retaining Ring 19 × 4.0 mm

O92244 Retaining Ring 24 × 4.0 mm

P92320 Retaining Pin 3 × 20 mm

P92325 Retaining Pin 3 × 25 mm

TT917N Screwdriver Set Mixed TT1 7 Pieces

MD920N Flat Screwdriver 0.5 × 3.0 × 75 mm S

MD922N Flat Screwdriver 1.0 × 5.5 × 75 mm S

MD932N Flat Screwdriver 1.2 × 6.5 × 100 mm L Hex Shaft

MD940N PH Screwdriver PH0 × 75 mm S

MD947N1 PH Screwdriver PH1 × 75 mm M

MD952N PH Screwdriver PH2 × 100 mm L Hex Shaft

MD962N2 PZ Screwdriver PZ2 × 100 mm L Hex Shaft

TT917TXN Screwdriver Set TX & TPX TT1 7 Pieces

MD610TPN TPX Screwdriver TPX10 × 100 mm M

MD615TPN TPX Screwdriver TPX15 × 100 mm M

MD620TPN TPX Screwdriver TPX20 × 100 mm M

MD625TPN TPX Screwdriver TPX25 × 100 mm L

MD630TPN TPX Screwdriver TPX30 × 100 mm L

MD908TN TX Screwdriver TX8 × 75 mm S

MD909TN TX Screwdriver TX9 × 75 mm S

TT9207 1/2" Impact Socket Accessories Set DIN TT1 11 Pieces

920020N 1/2" Impact Extension Bar DIN 75 mm

920021N 1/2" Impact Extension Bar DIN 125 mm

920023N 1/2" Impact Extension Bar DIN 250 mm

920030N 1/2" Impact Universal Joint DIN

920036AN Impact Reducing Adaptor 1/2"F (DIN) - 3/8"M (ANSI)

920037N Impact Step Up Adaptor 1/2"F - 3/4"M DIN

980036-C Impact Step Up Adaptor 3/8"F - 1/2"M DIN

O92194 Retaining Ring 19 × 4.0 mm

O92244 Retaining Ring 24 × 4.0 mm

P92320 Retaining Pin 3 × 20 mm

P92325 Retaining Pin 3 × 25 mm

TTAF32 1/4" & 3/8" Socket Set AF 6 pt TT1 32 Pieces

M140106-C 1/4" Socket 6 pt AF 3/16"

M140107-C 1/4" Socket 6 pt AF 7/32"

M140108-C 1/4" Socket 6 pt AF 1/4"

M140109-C 1/4" Socket 6 pt AF 9/32"

M140110-C	1/4" Socket 6 pt AF 5/16"
M140111-C	1/4" Socket 6 pt AF 11/32"
M140112-C	1/4" Socket 6 pt AF 3/8"
M140114-C	1/4" Socket 6 pt AF 7/16"
M140116-C	1/4" Socket 6 pt AF 1/2"
M140206-C	1/4" Deep Socket 6 pt AF 3/16"
M140207-C	1/4" Deep Socket 6 pt AF 7/32"
M140208-C	1/4" Deep Socket 6 pt AF 1/4"
M140209-C	1/4" Deep Socket 6 pt AF 9/32"
M140210-C	1/4" Deep Socket 6 pt AF 5/16"
M140211-C	1/4" Deep Socket 6 pt AF 11/32"
M140212-C	1/4" Deep Socket 6 pt AF 3/8"
M140214-C	1/4" Deep Socket 6 pt AF 7/16"
M140216-C	1/4" Deep Socket 6 pt AF 1/2"
M380112-C	3/8" Socket 6 pt AF 3/8"
M380114-C	3/8" Socket 6 pt AF 7/16"
M380116-C	3/8" Socket 6 pt AF 1/2"
M380118-C	3/8" Socket 6 pt AF 9/16"
M380120-C	3/8" Socket 6 pt AF 5/8"
M380122-C	3/8" Socket 6 pt AF 11/16"
M380124-C	3/8" Socket 6 pt AF 3/4"
M380212-C	3/8" Deep Socket 6 pt AF 3/8"
M380214-C	3/8" Deep Socket 6 pt AF 7/16"
M380216-C	3/8" Deep Socket 6 pt AF 1/2"
M380218-C	3/8" Deep Socket 6 pt AF 9/16"
M380220-C	3/8" Deep Socket 6 pt AF 5/8"
M380222-C	3/8" Deep Socket 6 pt AF 11/16"
M380224-C	3/8" Deep Socket 6 pt AF 3/4"

TTBM Measuring Tool Set TT1 4 Pieces

CALV150	Vernier Caliper 0-150 mm
SCR02	Scriber With Carbide Tip
SQAB10070	Square Base 100 × 70 mm
STMMI150	Steel Rule mm/AF 150 mm

TTBS35 1/4" & 3/8" Bit Socket Set TT1 35 Pieces

M140036-C	Step Up Adaptor 1/4"F - 3/8"M
M141210T-C	1/4" TX Bit Socket TX10
M141215T-C	1/4" TX Bit Socket TX15
M141220T-C	1/4" TX Bit Socket TX20
M141225T-C	1/4" TX Bit Socket TX25
M141227T-C	1/4" TX Bit Socket TX27
M141230T-C	1/4" TX Bit Socket TX30
M141240T-C	1/4" TX Bit Socket TX40
M141300-C	1/4" PH Bit Socket PH0

M141301-C 1/4" PH Bit Socket PH1

M141302-C 1/4" PH Bit Socket PH2

M141303-C 1/4" PH Bit Socket PH3

M141404-C 1/4" Flat Bit Socket 4 mm

M141407-C 1/4" Flat Bit Socket 7 mm

M141601-C 1/4" PZ Bit Socket PZ1

M141602-C 1/4" PZ Bit Socket PZ2

M141603-C 1/4" PZ Bit Socket PZ3

M380035-C Reducing Adaptor 3/8"F - 1/4"M

M381104-C 3/8" Hex Bit Socket AF 1/8"

M381105-C 3/8" Hex Bit Socket AF 5/32"

M381106-C 3/8" Hex Bit Socket AF 3/16"

M381107-C 3/8" Hex Bit Socket AF 7/32"

M381108-C 3/8" Hex Bit Socket AF 1/4"

M381110-C 3/8" Hex Bit Socket AF 5/16"

M381112-C 3/8" Hex Bit Socket AF 3/8"

M381503-C 3/8" Hex Bit Socket Metric 3 mm

M381504-C 3/8" Hex Bit Socket Metric 4 mm

M381505-C 3/8" Hex Bit Socket Metric 5 mm

M3815055-C 3/8" Hex Bit Socket Metric 5.5 mm

M381506-C 3/8" Hex Bit Socket Metric 6 mm

M381507-C 3/8" Hex Bit Socket Metric 7 mm

M381508-C 3/8" Hex Bit Socket Metric 8 mm

M381510-C 3/8" Hex Bit Socket Metric 10 mm

M381512-C 3/8" Hex Bit Socket Metric 12 mm

TTDB28 Drill Bit Set 1.0-13.0 mm TT1 28 Pieces

DBX010 Drill Bits Fully Ground 1.0 mm

DBX010 Drill Bits Fully Ground 1.0 mm

DBX010 Drill Bits Fully Ground 1.0 mm

DBX015 Drill Bits Fully Ground 1.5 mm

DBX015 Drill Bits Fully Ground 1.5 mm

DBX015 Drill Bits Fully Ground 1.5 mm

DBX020 Drill Bits Fully Ground 2.0 mm

DBX020 Drill Bits Fully Ground 2.0 mm

DBX025 Drill Bits Fully Ground 2.5 mm

DBX025 Drill Bits Fully Ground 2.5 mm

DBX030 Drill Bits Fully Ground 3.0 mm

DBX035 Drill Bits Fully Ground 3.5 mm

DBX040 Drill Bits Fully Ground 4.0 mm

DBX045 Drill Bits Fully Ground 4.5 mm

DBX050 Drill Bits Fully Ground 5.0 mm

DBX055 Drill Bits Fully Ground 5.5 mm

DBX060 Drill Bits Fully Ground 6.0 mm

DBX065 Drill Bits Fully Ground 6.5 mm

DBX070 Drill Bits Fully Ground 7.0 mm

DBX075 Drill Bits Fully Ground 7.5 mm

DBX080 Drill Bits Fully Ground 8.0 mm

DBX085 Drill Bits Fully Ground 8.5 mm

DBX090 Drill Bits Fully Ground 9.0 mm

DBX100 Drill Bits Fully Ground 10.0 mm

DBX105 Drill Bits Fully Ground 10.5 mm

DBX110 Drill Bits Fully Ground 11.0 mm

DBX120 Drill Bits Fully Ground 12.0 mm

DBX130 Drill Bits Fully Ground 13.0 mm

TTDCT05 Cutting Tool Set TT2 5 Pieces

491 Tin Snip Right/Straight

492 Tin Snip Left/Straight

496 Heavy Duty Cable Cutter Bi Material Handle 250 mm

497 Scissors 5-1/2"

710N Quick Action Utility Knife

TTHEX7 T-Handle Ball Point Hex Key Set TT1 7 Pieces

5105025 T Handle Ball Point Hex Key Metric 2.5 mm

510503 T Handle Ball Point Hex Key Metric 3 mm

510504 T Handle Ball Point Hex Key Metric 4 mm

510505 T Handle Ball Point Hex Key Metric 5 mm

510506 T Handle Ball Point Hex Key Metric 6 mm

510507 T Handle Ball Point Hex Key Metric 7 mm

510508 T Handle Ball Point Hex Key Metric 8 mm

TTHT28 Ball Point Hex & TX Key Set TT1 28 Pieces

3101025BL Ball Point Hex Key AF 5/64"

310103BL Ball Point Hex Key AF 3/32"

310104BL Ball Point Hex Key AF 1/8"

310105BL Ball Point Hex Key AF 5/32"

310106BL Ball Point Hex Key AF 3/16"

310107BL Ball Point Hex Key AF 7/32"

310108BL Ball Point Hex Key AF 1/4"

310110BL Ball Point Hex Key AF 5/16"

310112BL Ball Point Hex Key AF 3/8"

3105015BL-C Ball Point Hex Key Metric 1.5 mm

3105025BL-C Ball Point Hex Key Metric 2.5 mm

310502BL-C Ball Point Hex Key Metric 2 mm

310503BL-C Ball Point Hex Key Metric 3 mm

310504BL-C Ball Point Hex Key Metric 4 mm

310505BL-C Ball Point Hex Key Metric 5 mm

310506BL-C Ball Point Hex Key Metric 6 mm

310507BL-C Ball Point Hex Key Metric 7 mm

310508BL-C Ball Point Hex Key Metric 8 mm

310510BL-C Ball Point Hex Key Metric 10 mm

320008 TX Key TX8

320009 TX Key TX9

320010 TX Key TX10

320015 TX Key TX15

320020 TX Key TX20

320025 TX Key TX25

320027 TX Key TX27

320030 TX Key TX30

320040 TX Key TX40

TTID20 1/2" Impact Driver Set TT1 20 Pcs

910504 5/16" Hex Impact Driver Bits 4 mm

910505 5/16" Hex Impact Driver Bits 5 mm

910506 5/16" Hex Impact Driver Bits 6 mm

910508 5/16" Hex Impact Driver Bits 8 mm

920060-C 1/2" Impact Coupler Adaptor 5/16" Hex

930001 5/16" PH Impact Driver Bits PH1

930002 5/16" PH Impact Driver Bits PH2

930003 5/16" PH Impact Driver Bits PH3

930004 5/16" PH Impact Driver Bits PH4

940006 5/16" Flat Impact Driver Bits 6 mm

940008 5/16" Flat Impact Driver Bits 8 mm

940010 5/16" Flat Impact Driver Bits 10 mm

940012 5/16" Flat Impact Driver Bits 12 mm

970030 5/16" TX Impact Driver Bits TX30

970040 5/16" TX Impact Driver Bits TX40

970045 5/16" TX Impact Driver Bits TX45

970050 5/16" TX Impact Driver Bits TX50

970055 5/16" TX Impact Driver Bits TX55

980086 Hex Socket Adaptor 5/16" Hex - 3/8"

ID512A 1/2" Impact Driver Heavy Duty

TTMD74 Ratcheting Screwdriver Bit Set TT1 74 Pieces

FL2506A03 1/4" Flat Bits 25 mm 0.6 × 3.5 mm

FL2506B03 1/4" Flat Bits 25 mm 0.6 × 4.5 mm

FL2507A03 1/4" Flat Bits 25 mm 7 mm

FL2508A03 1/4" Flat Bits 25 mm 0.8 × 4.0 mm

FL2508B03 1/4" Flat Bits 25 mm 0.8 × 5.5 mm

FL2508B03 1/4" Flat Bits 25 mm 0.8 × 5.5 mm

FL2508B03 1/4" Flat Bits 25 mm 0.8 × 5.5 mm

FL2512A03 1/4" Flat Bits 25 mm 1.2 × 6.5 mm

FL2516A03 1/4" Flat Bits 25 mm 1.6 × 8.0 mm

GR25002010 1/4" PH G Bits 25 mm PH2G

GR25002010 1/4" PH G Bits 25 mm PH2G

GR25002010 1/4" PH G Bits 25 mm PH2G

HEX2500203 1/4" Hex Bits 25 mm 2 mm

HEX2500303 1/4" Hex Bits 25 mm 3 mm

HEX2500403 1/4" Hex Bits 25 mm 4 mm

HEX2500503 1/4" Hex Bits 25 mm 5 mm

HEX2500603 1/4" Hex Bits 25 mm 6 mm

HEX2500803 1/4" Hex Bits 25 mm 8 mm

M140060-C 1/4" Bit Adaptor Hex Bit Coupler

MDR908 1/4" Ratcheting Bits Driver Set

- **FL2507A03** 1/4" Flat Bits 25 mm 7 mm
- **FL2510A03** 1/4" Flat Bits 25 mm 1.0 × 5.5 mm
- **M140037** Hex Socket Adaptor 1/4" Hex - 1/4" 25 mm
- **PH2500103** 1/4" PH Bits 25 mm PH1
- **PH2500203** 1/4" PH Bits 25 mm PH2
- **PZ2500103** 1/4" PZ Bits 25 mm PZ1
- **PZ2500203** 1/4" PZ Bits 25 mm PZ2

PH2500103 1/4" PH Bits 25 mm PH1

PH2500103 1/4" PH Bits 25 mm PH1

PH2500103 1/4" PH Bits 25 mm PH1

PH2500103 1/4" PH Bits 25 mm PH1

PH2500203 1/4" PH Bits 25 mm PH2

PH2500203 1/4" PH Bits 25 mm PH2

PH2500203 1/4" PH Bits 25 mm PH2

PH2500203 1/4" PH Bits 25 mm PH2

PH2500203 1/4" PH Bits 25 mm PH2

PH2500203 1/4" PH Bits 25 mm PH2

PH2500203 1/4" PH Bits 25 mm PH2

PH2500303 1/4" PH Bits 25 mm PH3

PZ2500103 1/4" PZ Bits 25 mm PZ1

PZ2500103 1/4" PZ Bits 25 mm PZ1

PZ2500103 1/4" PZ Bits 25 mm PZ1

PZ2500103 1/4" PZ Bits 25 mm PZ1

PZ2500203 1/4" PZ Bits 25 mm PZ2

PZ2500203 1/4" PZ Bits 25 mm PZ2

PZ2500203 1/4" PZ Bits 25 mm PZ2

PZ2500203 1/4" PZ Bits 25 mm PZ2

PZ2500203 1/4" PZ Bits 25 mm PZ2

PZ2500203 1/4" PZ Bits 25 mm PZ2

PZ2500203 1/4" PZ Bits 25 mm PZ2

PZ2500303 1/4" PZ Bits 25 mm PZ3

ROB2500103 1/4" ROB Bits 25 mm ROB1

ROB2500203 1/4" ROB Bits 25 mm ROB2

ROB2500303 1/4" ROB Bits 25 mm ROB3

TPX2501003 1/4" TPX Bits 25 mm TPX10

TPX2501503 1/4" TPX Bits 25 mm TPX15

TPX2502003 1/4" TPX Bits 25 mm TPX20

TPX2502003 1/4" TPX Bits 25 mm TPX20

TPX2502503 1/4" TPX Bits 25 mm TPX25

TPX2502503 1/4" TPX Bits 25 mm TPX25

TPX2502703 1/4" TPX Bits 25 mm TPX27

TPX2503003 1/4" TPX Bits 25 mm TPX30

TPX2504003 1/4" TPX Bits 25 mm TPX40

TTMD74-1 1/4" Bits Driver Extension 100 mm

TTMD74-2 1/4" Bits Driver Extension 150 mm Flexible

TX2500603 1/4" TX Bits 25 mm TX6

TX2500703 1/4" TX Bits 25 mm TX7

TX2500803 1/4" TX Bits 25 mm TX8

TX2500903 1/4" TX Bits 25 mm TX9

TX2501003 1/4" TX Bits 25 mm TX10

TX2501503 1/4" TX Bits 25 mm TX15

TX2502003 1/4" TX Bits 25 mm TX20

TX2502003 1/4" TX Bits 25 mm TX20

TX2502003 1/4" TX Bits 25 mm TX20

TX2502503 1/4" TX Bits 25 mm TX25

TX2502503 1/4" TX Bits 25 mm TX25

TX2502503 1/4" TX Bits 25 mm TX25

TX2502703 1/4" TX Bits 25 mm TX27

TX2503003 1/4" TX Bits 25 mm TX30

TX2504003 1/4" TX Bits 25 mm TX40

TTMDQ49 Bits Driver Set TT1 49 Pieces

FL2506A03 1/4" Flat Bits 25 mm 0.6 × 3.5 mm

FL2510A03 1/4" Flat Bits 25 mm 1.0 × 5.5 mm

FL2516A03 1/4" Flat Bits 25 mm 1.6 × 8.0 mm

FL8908A01 1/4" Flat Bits 89 mm 0.8 × 4.0 mm

HEX2500203 1/4" Hex Bits 25 mm 2 mm

HEX2500303 1/4" Hex Bits 25 mm 3 mm

HEX2500403 1/4" Hex Bits 25 mm 4 mm

HEX2500503 1/4" Hex Bits 25 mm 5 mm

HEX2500603 1/4" Hex Bits 25 mm 6 mm

HEX2500803 1/4" Hex Bits 25 mm 8 mm

HEX8900401 1/4" Hex Bits 89 mm Hex 4 mm

M140039 Hex Socket Adaptor 1/4" Hex - 1/4" 30 mm

M140504-C 1/4" Socket 6 pt Metric 4 mm

M140505-C 1/4" Socket 6 pt Metric 5 mm

M1405055-C 1/4" Socket 6 pt Metric 5.5 mm

M140506-C 1/4" Socket 6 pt Metric 6 mm

M140507-C 1/4" Socket 6 pt Metric 7 mm

M140508-C 1/4" Socket 6 pt Metric 8 mm

M140509-C 1/4" Socket 6 pt Metric 9 mm

M140510-C 1/4" Socket 6 pt Metric 10 mm

M140511-C 1/4" Socket 6 pt Metric 11 mm

M140512-C 1/4" Socket 6 pt Metric 12 mm

M140513-C 1/4" Socket 6 pt Metric 13 mm

MDQ147 1/4" Quick Chuck Bits Driver 147 mm

PH2500103 1/4" PH Bits 25 mm PH1

PH2500203 1/4" PH Bits 25 mm PH2

PH2500303 1/4" PH Bits 25 mm PH3

PH8900101 1/4" PH Bits 89 mm PH1

PH8900201 1/4" PH Bits 89 mm PH2

PZ2500103 1/4" PZ Bits 25 mm PZ1

PZ2500203 1/4" PZ Bits 25 mm PZ2

PZ2500303 1/4" PZ Bits 25 mm PZ3

PZ8900201 1/4" PZ Bits 89 mm PZ2

RHA14 1/4" Ratchet Head Hex/Square Drive

ROB2500103 1/4" ROB Bits 25 mm ROB1

ROB2500203 1/4" ROB Bits 25 mm ROB2

ROB2500303 1/4" ROB Bits 25 mm ROB3

TPX2502003 1/4" TPX Bits 25 mm TPX20

TPX2502503 1/4" TPX Bits 25 mm TPX25

TPX2503003 1/4" TPX Bits 25 mm TPX30

TX2501003 1/4" TX Bits 25 mm TX10

TX2501503 1/4" TX Bits 25 mm TX15

TX2502003 1/4" TX Bits 25 mm TX20

TX2502503 1/4" TX Bits 25 mm TX25

TX2503003 1/4" TX Bits 25 mm TX30

TX2504003 1/4" TX Bits 25 mm TX40

TX8902001 1/4" TX Bits 89 mm TX20

TX8902501 1/4" TX Bits 89 mm TX25

TX8903001 1/4" TX Bits 89 mm TX30

TTPC09 Punch & Chisel Set TT1 9 Pieces

CC150F Flat Cold Chisel 150 × 18 mm

CC200F Flat Cold Chisel 200 × 25 mm

CP05 Centre Punch 5 mm

PP03 Parallel Pin Punch 3 mm

PP04 Parallel Pin Punch 4 mm

PP05 Parallel Pin Punch 5 mm

PP06 Parallel Pin Punch 6 mm

PP07 Parallel Pin Punch 7 mm

PP08 Parallel Pin Punch 8 mm

TTRS15 1/2" Long Ribe® & XZN/Triple Square Bit Socket Set TT1 15 Pieces

M122704-C 1/2" Long Ribe® Bit Socket 04

M122705-C 1/2" Long Ribe® Bit Socket 05

M122706-C 1/2" Long Ribe® Bit Socket 06

M122708-C 1/2" Long Ribe® Bit Socket 08

M122710-C 1/2" Long Ribe® Bit Socket 10

M122711-C 1/2" Long Ribe® Bit Socket 11

M122712-C 1/2" Long Ribe® Bit Socket 12

M122713-C 1/2" Long Ribe® Bit Socket 13

M122805-C 1/2" Long XZN/Triple Square Bit Socket 05

M122806-C 1/2" Long XZN/Triple Square Bit Socket 06

M122808-C 1/2" Long XZN/Triple Square Bit Socket 08

M122810-C 1/2" Long XZN/Triple Square Bit Socket 10

M122812-C 1/2" Long XZN/Triple Square Bit Socket 12

M122814-C 1/2" Long XZN/Triple Square Bit Socket 14

M122816-C 1/2" Long XZN/Triple Square Bit Socket 16

TTTX30 3/8" TX Bit Socket Set TT1 30 Pieces

M140704-C 1/4" TX-E Socket E4

M140705-C 1/4" TX-E Socket E5

M140706-C 1/4" TX-E Socket E6

M140707-C 1/4" TX-E Socket E7

M140708-C 1/4" TX-E Socket E8

M380020-C 3/8" Extension Bar 75 mm

M380035-C Reducing Adaptor 3/8"F - 1/4"M

M380710-C 3/8" TX-E Socket E10

M380712-C 3/8" TX-E Socket E12

M380714-C 3/8" TX-E Socket E14

M380716-C 3/8" TX-E Socket E16

M380718-C 3/8" TX-E Socket E18

M381210-C 3/8" TPX Bit Socket TPX10

M381210T-C 3/8" TX Bit Socket TX10

M381215-C 3/8" TPX Bit Socket TPX15

M381215T-C 3/8" TX Bit Socket TX15

M381220-C 3/8" TPX Bit Socket TPX20

M381220T-C 3/8" TX Bit Socket TX20

M381225-C 3/8" TPX Bit Socket TPX25

M381225T-C 3/8" TX Bit Socket TX25

M381227-C 3/8" TPX Bit Socket TPX27

M381227T-C 3/8" TX Bit Socket TX27

M381230-C 3/8" TPX Bit Socket TPX30

M381230T-C 3/8" TX Bit Socket TX30

M381240-C 3/8" TPX Bit Socket TPX40

M381240T-C 3/8" TX Bit Socket TX40

M381245-C 3/8" TPX Bit Socket TPX45

M381245T-C 3/8" TX Bit Socket TX45

M381250-C 3/8" TPX Bit Socket TPX50

M381250T-C 3/8" TX Bit Socket TX50

TTTX7 T-Handle TX/TPX Key Set TT1 7 Pieces

520010 T Handle Ball Point TX Key TX10

520015 T Handle Ball Point TX Key TX15

520020 T Handle Ball Point TX Key TX20

520025 T Handle Ball Point TX Key TX25

520027 T Handle Ball Point TX Key TX27

520030 T Handle Ball Point TX Key TX30

520040 T Handle Ball Point TX Key TX40

TTTXH15 1/2" Long Hex & TX Bit Socket Set TT1 15 Pieces

M122220T-C 1/2" Long TX Bit Socket TX20

M122225T-C 1/2" Long TX Bit Socket TX25

M122227T-C 1/2" Long TX Bit Socket TX27

M122230T-C 1/2" Long TX Bit Socket TX30

M122240T-C 1/2" Long TX Bit Socket TX40

M122245T-C 1/2" Long TX Bit Socket TX45

M122250T-C 1/2" Long TX Bit Socket TX50

M122255T-C 1/2" Long TX Bit Socket TX55

M122260T-C 1/2" Long TX Bit Socket TX60

M122505-C 1/2" Long Hex Bit Socket Metric 5 mm

M122506-C 1/2" Long Hex Bit Socket Metric 6 mm

M122507-C 1/2" Long Hex Bit Socket Metric 7 mm

M122508-C 1/2" Long Hex Bit Socket Metric 8 mm

M122510-C 1/2" Long Hex Bit Socket Metric 10 mm

M122512-C 1/2" Long Hex Bit Socket Metric 12 mm

TTVG05 Power Grip Plier Set TT1 5 Pieces

401-10 Curved Jaw Power Grip Plier 235 mm

401-4 Curved Jaw Power Grip Plier 105 mm

401-7 Curved Jaw Power Grip Plier 190 mm

404-4 Long Nose Power Grip Plier 125 mm

404-6 Long Nose Power Grip Plier 170 mm

TTX2032 Combination Spanner Set TTX4 7 Pieces

600520 Combination Spanner Metric 20 mm

600521 Combination Spanner Metric 21 mm

600522 Combination Spanner Metric 22 mm

600524 Combination Spanner Metric 24 mm

600527 Combination Spanner Metric 27 mm

600530 Combination Spanner Metric 30 mm

600532 Combination Spanner Metric 32 mm

TTX2640 Combination Spanner Set AF TTX4 7 Pieces

600126 Combination Spanner AF 13/16"

600128 Combination Spanner AF 7/8"

600130 Combination Spanner AF 15/16"

600132 Combination Spanner AF 1"

600134 Combination Spanner AF 1-1/16"

600136 Combination Spanner AF 1-1/8"

600140 Combination Spanner AF 1-1/4"

TTX3404 3/4" Ratchet & Accessories Set TTX4 4 Pieces

M3400-72 3/4" Ratchet Heavy Duty 72 Teeth

M340021-C 3/4" Extension Bar 200 mm

M340022-C 3/4" Extension Bar 400 mm

M340050-C 3/4" Sliding T Bar

TTX3414 3/4" Socket Set 6 pt TTX4 14 Pieces

M3405196-C 3/4" Socket 6 pt Metric 19 mm

M3405216-C 3/4" Socket 6 pt Metric 21 mm

M3405226-C 3/4" Socket 6 pt Metric 22 mm

M3405246-C 3/4" Socket 6 pt Metric 24 mm

M3405276-C 3/4" Socket 6 pt Metric 27 mm

M3405306-C 3/4" Socket 6 pt Metric 30 mm

M3405326-C 3/4" Socket 6 pt Metric 32 mm

M3405336-C 3/4" Socket 6 pt Metric 33 mm

M3405346-C 3/4" Socket 6 pt Metric 34 mm

M3405366-C 3/4" Socket 6 pt Metric 36 mm

M3405386-C 3/4" Socket 6 pt Metric 38 mm

M3405416-C 3/4" Socket 6 pt Metric 41 mm

M3405466-C 3/4" Socket 6 pt Metric 46 mm

M3405506-C 3/4" Socket 6 pt Metric 50 mm

TTX474-9E Circlip Plier Set PRO 40-100 mm TTX4 4 Pieces

MBE470-9 Circlip Plier Inner Straight PRO 225 mm

MBE471-9 Circlip Plier Inner Bent PRO 220 mm

MBE472-9 Circlip Plier Outer Straight PRO 225 mm

MBE473-9 Circlip Plier Outer Bent PRO 220 mm

TTX918N Screwdriver Set Flat & PH TTX4 8 Pieces

MD920N1 Flat Screwdriver 0.5 × 3.0 × 100 mm S

MD923N Flat Screwdriver 1.0 × 5.5 × 150 mm M

MD928N Flat Screwdriver 1.2 × 6.5 × 38 mm XS

MD932N1 Flat Screwdriver 1.2 × 6.5 × 150 mm L Hex Shaft

MD934N Flat Screwdriver 1.2 × 8.0 × 150 mm XL Hex Shaft

MD935N Flat Screwdriver 1.6 × 10.0 × 200 mm XL Hex Shaft

MD948N PH Screwdriver PH2 × 38 mm XS

MD953N PH Screwdriver PH3 × 150 mm XL Hex Shaft

TTXEXT13 Extension Bars Set TTX4 13 Pieces

M120020W-C 1/2" Wobble Extension Bar 75 mm

M120024-C 1/2" Extension Bar 500 mm

M120030-C	1/2" Universal Joint
M140022-C	1/4" Extension Bar 150 mm
M140024-C	1/4" Extension Bar 305 mm
M140030-C	1/4" Universal Joint
M380020W-C	3/8" Wobble Extension Bar 75 mm
M380024-C	3/8" Extension Bar 500 mm
M380030-C	3/8" Universal Joint
M380035-C	Reducing Adaptor 3/8"F - 1/4"M
MDM711	Hex Mini Screwdriver 2
MDM712	Hex Mini Screwdriver 2.5
T-HD	T Bar Handle Grip

TTXF05 Hand File Set TTX4 5 Pieces

FLFT10	Hand File 250 mm Flat
FLHF10	Hand File 250 mm Flat Tapered
FLHR10	Hand File 250 mm Half round
FLRD10	Hand File 250 mm Round
FLTR10	Hand File 250 mm Triangular