AL1200

IO-Link master with PROFINET interface

IO-Link Master PL PN 4P IP67

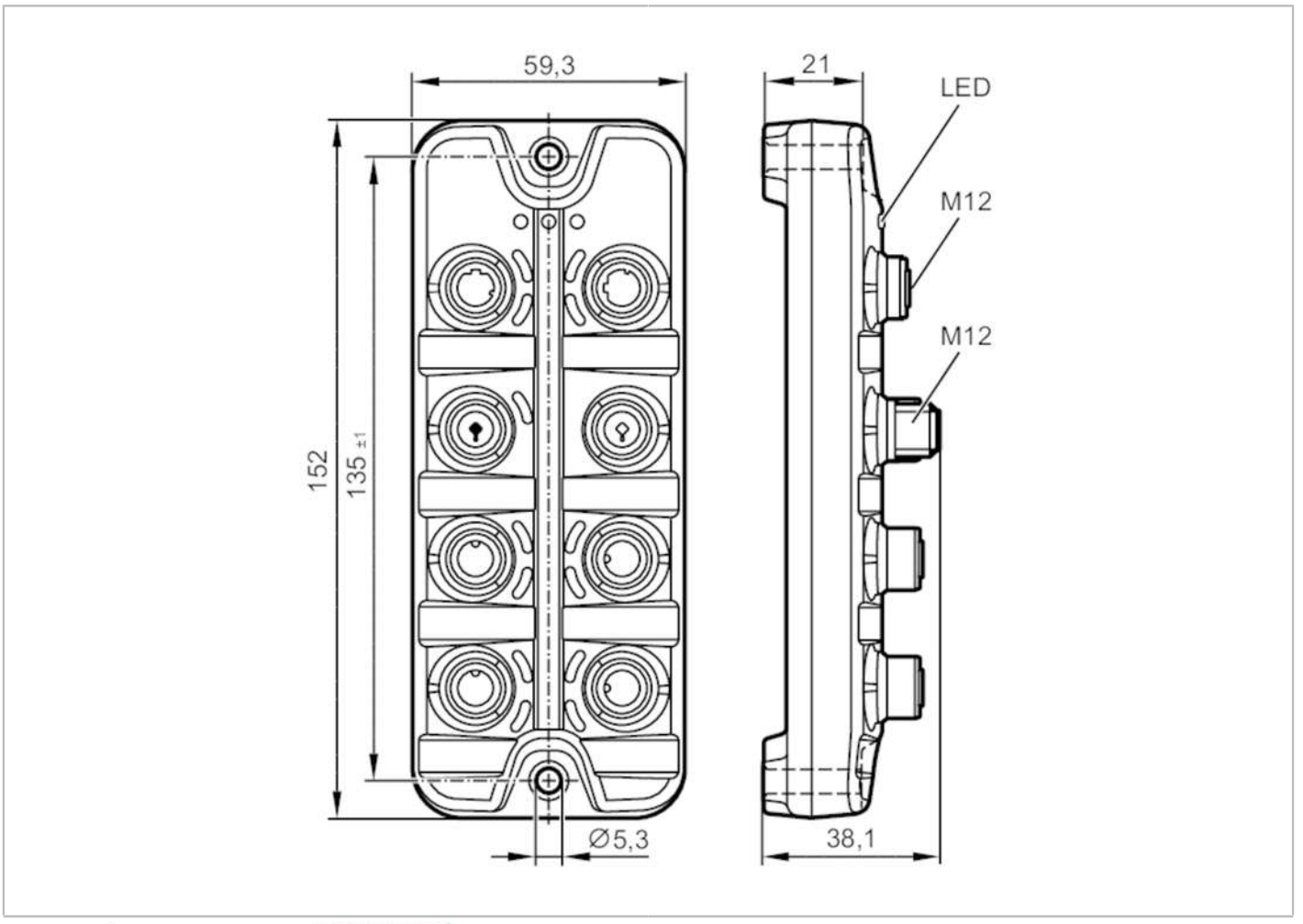

Application		
Application		I/O modules for field applications
Daisy-chain function		power supply; fieldbus interface
Electrical data		
Operating voltage	[V]	20...30 DC; (US ; to SELV/PELV)
Current consumption	[mA]	300...3900; (US)
Protection class		III
Sensor supply US		
Max. current load total	[A]	3.6
Inputs / outputs		
Total number of inputs and outputs		8; (configurable)
Number of inputs and outputs		Number of digital inputs: 8; Number of digital outputs: 4
Inputs		
Number of digital inputs		8; (IO-Link Port Class A: 4 x 2)
Switching level high	[V]	11...30
Switching level low	[V]	0...5

AL1200

IO-Link master with PROFINET interface

IO-Link Master PL PN 4P IP67

Digital inputs protected against short circuits			yes
Outputs			
Number of digital outputs			4; (IO-Link Port Class A: 4 x 1)
Max. current load per output	[mA]		300
Short-circuit proof			yes
Interfaces			
Communication interface			Ethernet; IO-Link
Ethernet - PROFINET			
Transmission standard			100Base-TX
Transmission rate			100 MBit/s
Protocol			PROFINET
Factory settings			IP address: 0.0.0.0
			subnet mask: 0.0.0.0
			gateway IP address: 0.0.0.0
			MAC address: see type label
Note on interfaces			CC-C (Conformance Class C) (IRT-Switch)
			Netload Class III
			SNMP (Simple Network Management Protocol)
			MRP (Media Redundancy Protocol)
			Supported network topologies: line
			ring
IO-Link Master			
Transmission type			COM1 (4,8 kBaud); COM2 (38,4 kBaud); COM3 (230,4 kBaud)
IO-Link revision			1.1
Number of ports class A			4
Operating conditions			
Ambient temperature	[°C]		-25...60
Storage temperature	[°C]		-25...85
Max. relative air humidity	[%]		90
Protection			IP 65; IP 66; IP 67
Protection rating (NEMA 250)			6P
Pollution degree			2
Chemical media		ISO 16750-5	AA, BA, BD, HLP, CC, DB, DC, DD, CA
		NEMA 250 5.13.1	AA
Tests / approvals			
EMC		EN 61000-6-2	
		EN 61000-6-4	
Shock resistance		DIN EN 60068-2-27	
Vibration resistance		DIN EN 60068-2-64 2009-04	
		DIN EN 60068-2-6 2008-10	
MTTF	[years]		101
Mechanical data			
Weight	[g]		273.5
Materials			housing: PA orange; socket: brass nickel-plated

AL1200

IO-Link master with PROFINET interface

IO-Link Master PL PN 4P IP67

Sealing material	FKM

Remarks

Remarks	For further information please see the operating instructions.
Pack quantity	1 pcs.

Electrical connection - Ethernet

Connector: M12; coding: D; Sealing: FKM



IN / OUT X21, X22

1	TX +
2	RX +
3	TX -
4	RX -
5	not used

Electrical connection - Process connection

Connector: M12; coding: A; Sealing: FKM

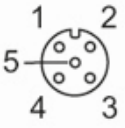

IO-Link Port Class A X01...X04

1	Sensor supply (US) L+
2	digital input
3	Sensor supply (US) L-
4	C/Q IO-Link
5	not used

Electrical connection - power supply IN

Connector: M12; coding: T



AL1200

IO-Link master with PROFINET interface

IO-Link Master PL PN 4P IP67

X31	
1	+ 24 V DC (US) brown
2	GND (UA) white
3	GND (US) blue
4	+ 24 V DC (UA) black

Electrical connection - power supply OUT

Connector: M12; coding: T; Sealing: FKM



X32	
1	+ 24 V DC (US) brown
2	GND (UA) white
3	GND (US) blue
4	+ 24 V DC (UA) black