Brand of NTN corporation

Technical data

UCPA212

Bearing units



Grey cast housing, radial insert ball bearing with socket set screws,seal with slinger

KIT CONTENT

UC212G2, PA212

VISUAL (S)

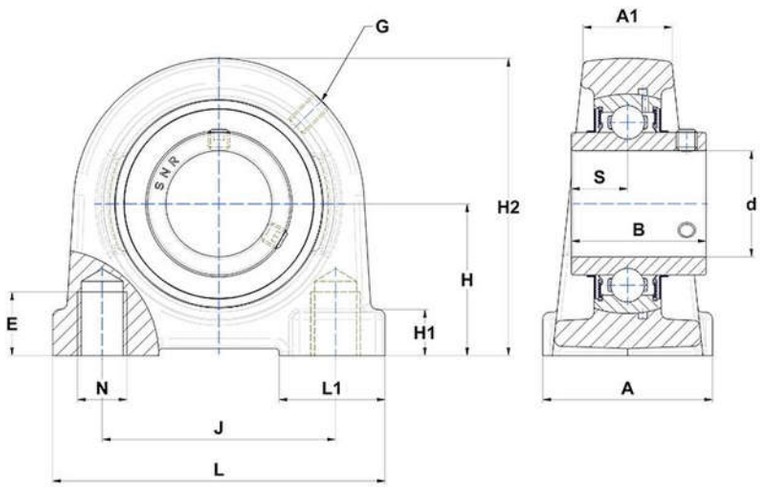

PRODUCT DEFINITION

Brand	SNR
A - Housing width	68 mm
A1 - Housing top width	36 mm
B - Width of Inner Ring	65,1 mm
d - Shaft diameter	60 mm
E - Mounting hole thread depth	25 mm

PRODUCT DEFINITION	
G - Grease fitting	M6x1
H - Distance mounting base to centerline spheric. seating diam.	69,9 mm
H1 - Housing foot height	15 mm
H2 - Housing height	138 mm
J - Mounting holes distance	114 mm
L - Housing length	150 mm
L1 - Housing foot length	52 mm
N - Mounting hole dimension	M16
S - Distance front side/bearing centre	25,4 mm

PRODUCT PERFORMANCE	
C - Dynamic load rating	52500000 mN
C0 - Static load rating	32800000 mN
Operating temperature min.	253,15 °K
Operating temperature max.	373,15 °K

OTHER FEATURES	
Mass	4,23 kg
Recommended tightening torque for set screw	22 N-m