MURR ELEKTRONIK
stay connected

MSUD valve plug A-18mm with cable

PUR 3x0.75 gy UL/CSA 5m

MSUD
Form A (18 mm)
24 V AC ±20% / DC ±25%
LED and suppression
Bridged PE
Further cable lengths on request.
Plastic housings with good resistance against chemicals and oils.
The resistance to aggressive media should be individually tested for your application. Further details on request.

Link to Product

Illustration



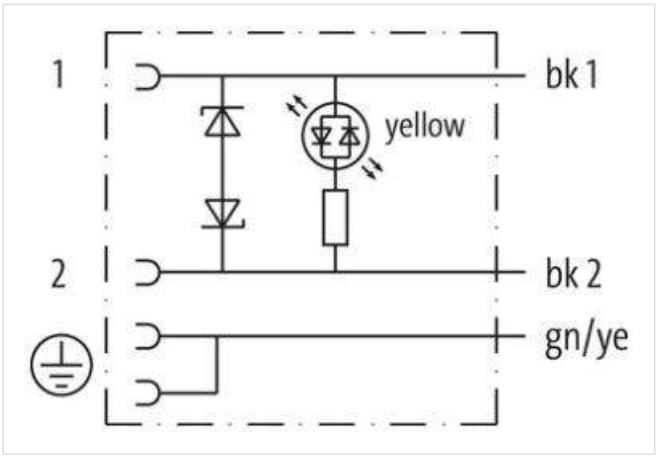

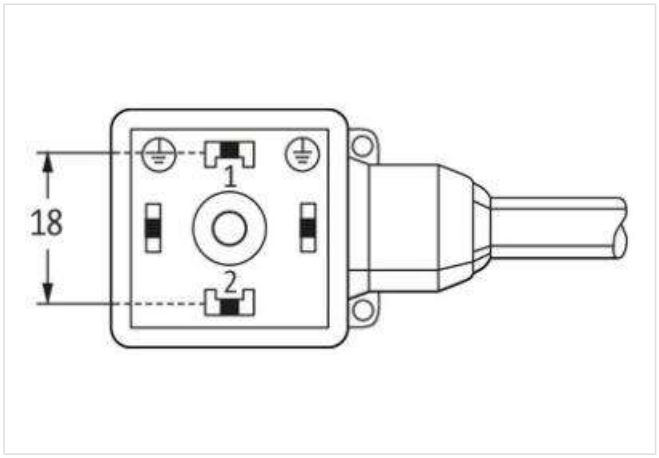

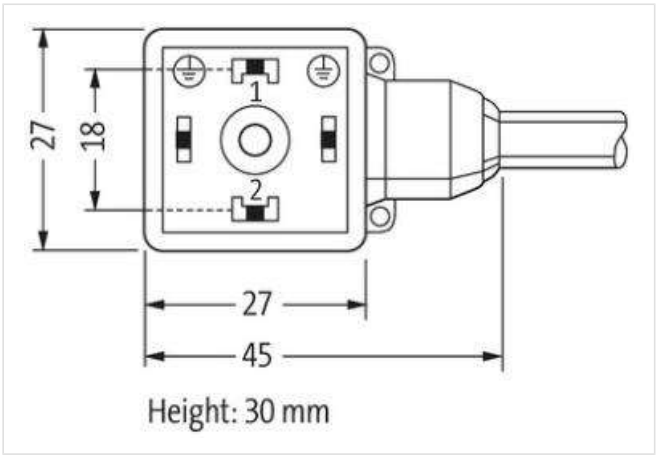

Product may differ from Image

Form

Form	18021

The information in this brochure has been compiled with the utmost care.
Liability for the correctness completeness and topicality of the information is restricted to gross negligence. Version: 2023-03-17

MURR ELEKTRONIK
stay connected

Technical Data	
Operating voltage	24 V AC ±20% / DC ±25%
Rated surge voltage	0.8 kV
Operating current per contact	max. 4 A
Current consumption	max. 15 mA
Material group	IEC 60664-1, category I
Switch off peak	max. 55 V
LED display	yellow
Locking of ports	M3 (recommended torque 0.4 Nm)
Protection	IP67 inserted and tightened (EN 60529)
Material	PBT
Locking material	Steel (galvanized)
Housing	Black plastic (gray on request)
Additional suppressor	Diode/Z-Diode
Switch off delay time	max. 20 ms
General data	
Material gasket	PUR
Pollution Degree	3
Temperature range	-25...+85 °C, depending on cable quality
Cables	
Cable identification	226
Cable Type	2 (PUR/PVC)
Approval (cable)	UL (AWM-Style 20549/1731), CSA; CE conform
Cable weight [g/m]	55,33 g
Material wire	Cu wire, bare
Resistor (core)	max. 26 Ω/km (20 °C)
Single wire Ø (core)	0.15 mm
Construction (core)	42× 0.15 mm (multi-strand wire class 6)
Diameter (core)	3× 0.75 mm²
AWG	similar to AWG 18
Material wire isolation	PVC
Material property (wire isolation)	CFC-, cadmium-, silicone- and lead-free
Shore hardness (wire isolation)	43 ±5 D
Wire-Ø incl. isolation	1.8 mm ±5%
Color/numbering of wires	bk numbered, gnye longitudinally striped
Stranding combination	3 wires twisted
Shield	no
Material jacket	PUR/PVC
Material property (jacket)	CFC-, halogen-, cadmium-, silicone- and lead-free, matt, low-adhesion, machine easy to process, abrasion-resistant, hydrolysis and microbial resistant
Shore hardness (jacket)	80 ±5 A (PVC-under jacket); 85 ±5 A (PUR-jacket)
Outer-Ø (jacket)	5.9 mm ±5%
Color (jacket)	gray
chemical resistance	good resistance to oil, gasoline and chemicals
Nominal voltage	UL 300 V AC
Test voltage	2000 V AC
Current load capacity	to DIN VDE 0298-4
Temperature range (fixed)	-30...+80 °C
Temperature range (mobile)	-5...+80 °C
Bend radius (fixed)	10× outer Ø
Bend radius (moving)	15× outer Ø
No. of bending cycles (C-track)	max. 2 Mio. (25 °C)
Travel speed (C-track)	max. 3.3 m/s
Acceleration (C-track)	max. 5 m/s²

The information in this brochure has been compiled with the utmost care.
Liability for the correctness completeness and topicality of the information is restricted to gross negligence. Version: 2023-03-17

Product article number of manufacturer	7000-18021-2260500
Cable length	5 m

The information in this brochure has been compiled with the utmost care.
Liability for the correctness completeness and topicality of the information is restricted to gross negligence. Version: 2023-03-17