Distributor, Series NL6-DIL

0821300978

2024-04-24

AVENTICS Series NL6 Air Preparation Units

The AVENTICS Series NL maintenance units are suitable for all areas: as individual components or as assembled maintenance units, for centralized or decentralized compressed air preparation, in compact or powerful versions, for use in high or low temperatures. This line offers a complete, customizable compressed air preparation technology. It includes an option to combine every component in the Series to achieve the desired function, making it possible to adjust the components precisely to the application requirements.



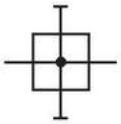

Technical data

Industry	Industrial
Parts	Distributor
Port	G 1
Type	Narrow distributor
Type	Can be assembled into blocks
Version	Distributor 2x
Mounting orientation	Any
Min. working pressure	0 bar
Max. working pressure	16 bar
Min. ambient temperature	-10 °C
Max. ambient temperature	60 °C
Medium	Compressed air Neutral gases
Nominal flow Qn	25000 l/min
Nominal flow Qn 1 to 2	25000 l/min
Nominal flow Qn 1 to 3	10000 l/min
Nominal flow Qn 1 to 5	10000 l/min
Weight	0.95 kg
Housing material	Die-cast aluminum
	0821300978

Technical information

The pressure dew point must be at least 15 °C less than ambient and medium temperature and may not exceed 3 °C.

Suitable for direct mounting of a PE2 and PM1 series pressure sensor (flange version).

Nominal flow Qn with secondary pressure p2 = 6 bar at Δp = 1 bar

A change in the flow direction (from air supply on the left to air supply on the right) occurs by rotating installation by 180° about the vertical axis. Please see the operating instructions for further details.

Subbase G1, material number 1827009591, must be ordered separately.

Block assembly with block assembly kit, material number 1827009593

Distributor, Series NL6-DIL

2024-04-24

0821300978

Dimensions

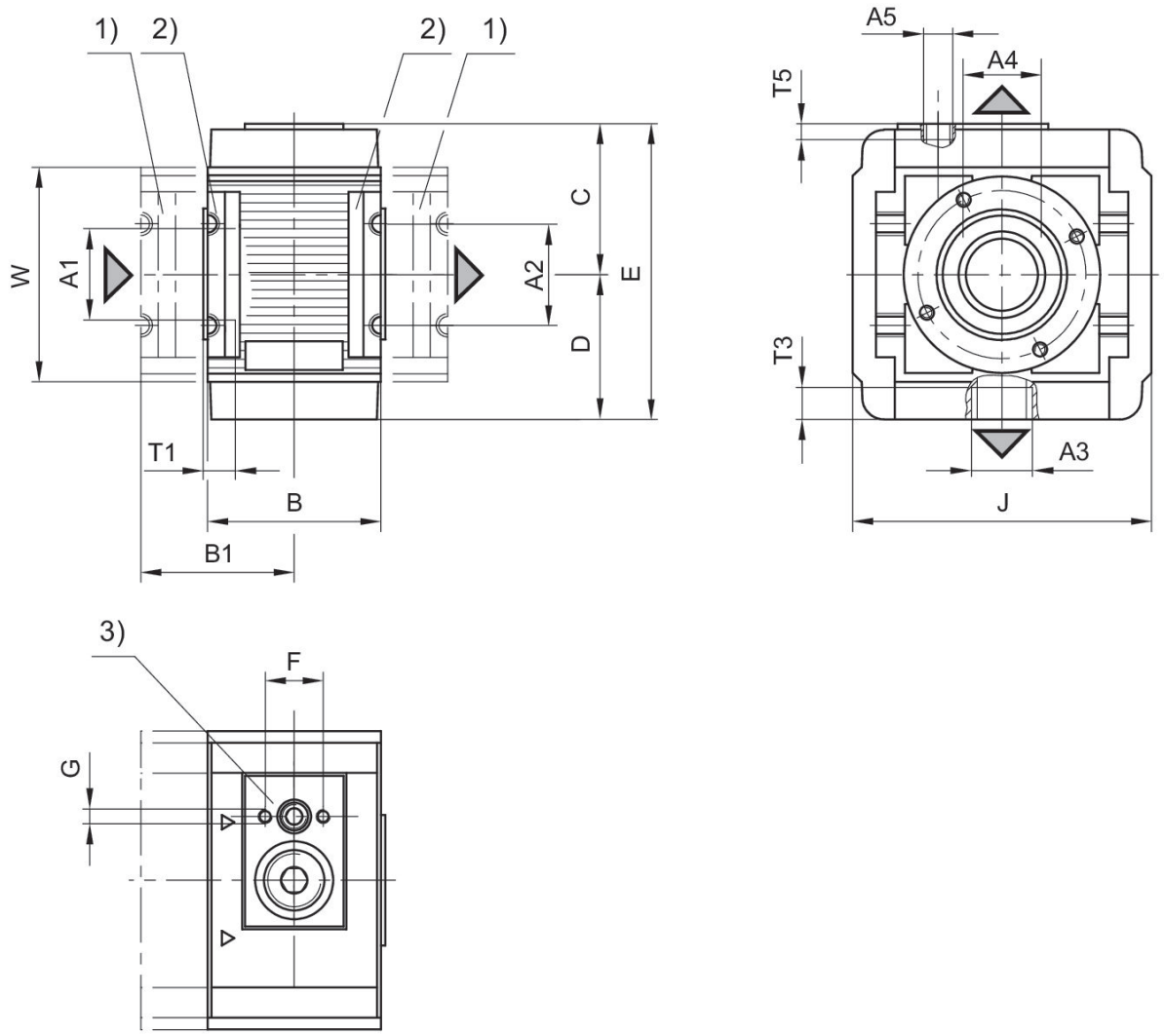

A1 = input A2 = output A3 = output
A4 = output
1) Subbase G1, material number 1827009591, must be ordered separately.
2) No connection thread
3) hole pattern for mechanical vacuum/pressure switch
Block assembly with block assembly kit, material number 1827009593

Dimensions in mm

Part No.	A1	A2	A3	A4	A5	B	B1	C	D
0821300978	G 1	G 1	G 1/2	G 1/2	G 1/8	60	53	52	50

Part No.	E	F	G	J	T1	T3	T5	W
0821300978	102	20	M5	103	18	14.5	8	74