CLIXX® 16 BK

Membrane cable entrie with strain relief, plastic, RAL 9005, M16



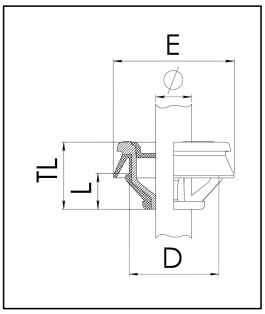

Products may differ in size, colour and appearance to those shown. If you require further information or customisation, please contact us directly.

RoHS

Material	Polypropylene
Material membrane	TPE
Temp. range min	-40 °C
Temp. range max	65 °C
Glow wire test	750 °C
Protection class	IP66 / IP67
Ø Connection thread D	16
Length screw-in thread L	7,3 mm
Ø cable diameter min	4,5 mm
Ø cable diameter max	10 mm
Collar diameter (E)	23 mm - 28 mm
Total length TL	15 mm
Ø Drilling	16,5 mm - 16,7 mm
Wall thickness S	0,8 mm - 3,5 mm
Product Color	RAL 9005
Order no. RAL 9005	10101930
Type	CLIXX® 16 BK
Packing unit	50
EAN number	4007685042208
Tariff number	39269097
ETIM-Classification	EC000451

18.02.2025

Your Contact:
WISKA Hoppmann GmbH
Kisdorfer Weg 28 · 24568 Kaltenkirchen · Germany
☎ +49-4191-508-0 · 🖷 +49-4191-508-209
contact@wiska.de · www.wiska.com

Other technical data on request / subject to change without notice

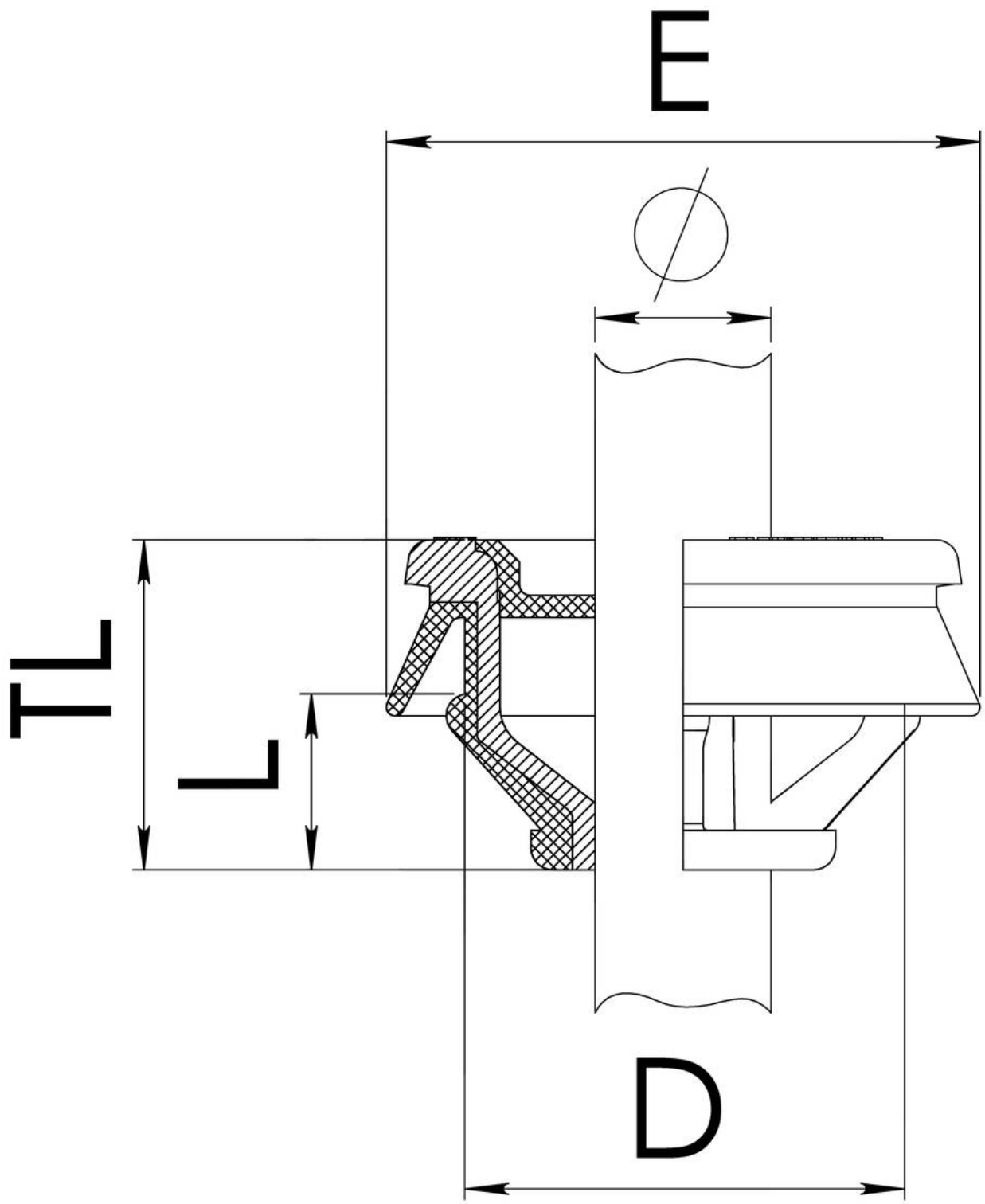

Your Contact:
WISKA Hoppmann GmbH
Kisdorfer Weg 28 · 24568 Kaltenkirchen · Germany
☎ +49-4191-508-0 · 🖷 +49-4191-508-209
contact@wiska.de · www.wiska.com

Other technical data on request / subject to change without notice