Bellow actuator with cover, series BCP, double, air connection between 3 mounting holes

1922161000

- Bellow cylinder with permanently crimped connecting plates
- Permit high forces in small installation space
- Enables angular movements and axial offset
- High corrosion and temperature resistance
- Tested safety up to 24 bar

AVENTICS Series BCP Bellow actuators

The AVENTICS Series BCP cylinders are bellow actuators with firmly flanged steel covers and bellows made of natural rubber in the standard version. The heat-resistant version is distinguished by bellows made of epichlorohydrin rubber (ECO) and the corrosion-resistant version by stainless steel covers (V2A).



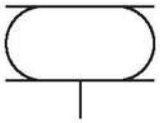

Technical data

Industry	Industrial
Bellows	double
Type	Bellow actuator with cover
Functional principle	Single-acting, retracted without pressure
Compressed air connection	G 3/4
Cover diameter	141 mm
Max. permissible angle of tilt	20 °
Max. effective stroke	153 mm
Min. radial installation space	235 mm
Min. installation height	77 mm
Max. installation height	230 mm
Min. force	7700 N
Max. force	14800 N
Min. working pressure	0 bar
Max. working pressure	8 bar
Min. ambient temperature	-40 °C
Max. ambient temperature	70 °C
Medium	Compressed air
Reduced service life at a temperature greater than	50 °C

Bellow actuator with cover, series BCP, double, air connection between 3 mounting holes

1922161000

~~Pressure for determining forces~~	~~6 bar~~
Weight	2.3 kg

Material

Material bellow	caoutchouc/butadiene caoutchouc
Material front cover	Steel, chrome-plated
Surface cover	galvanized
Part No.	1922161000

Technical information

Compliance with the minimum height H min. as well as the maximum height H max. must be ensured with end stops.

Use at operating height ≥ Hmax: only permitted upon approval by AVENTICS

Further information on vibration isolation can be found in the “Technical information” document (available in the MediaCentre).

The pressure dew point must be at least 15 °C less than ambient and medium temperature and may not exceed 3 °C.

The oil content of compressed air must remain constant during the life cycle.

Use only the approved oils from AVENTICS. Further information can be found in the “Technical information” document (available in https://www.emerson.com/en-us/support).

Bellow actuator with cover, series BCP, double, air connection between 3 mounting holes

1922161000

Dimensions

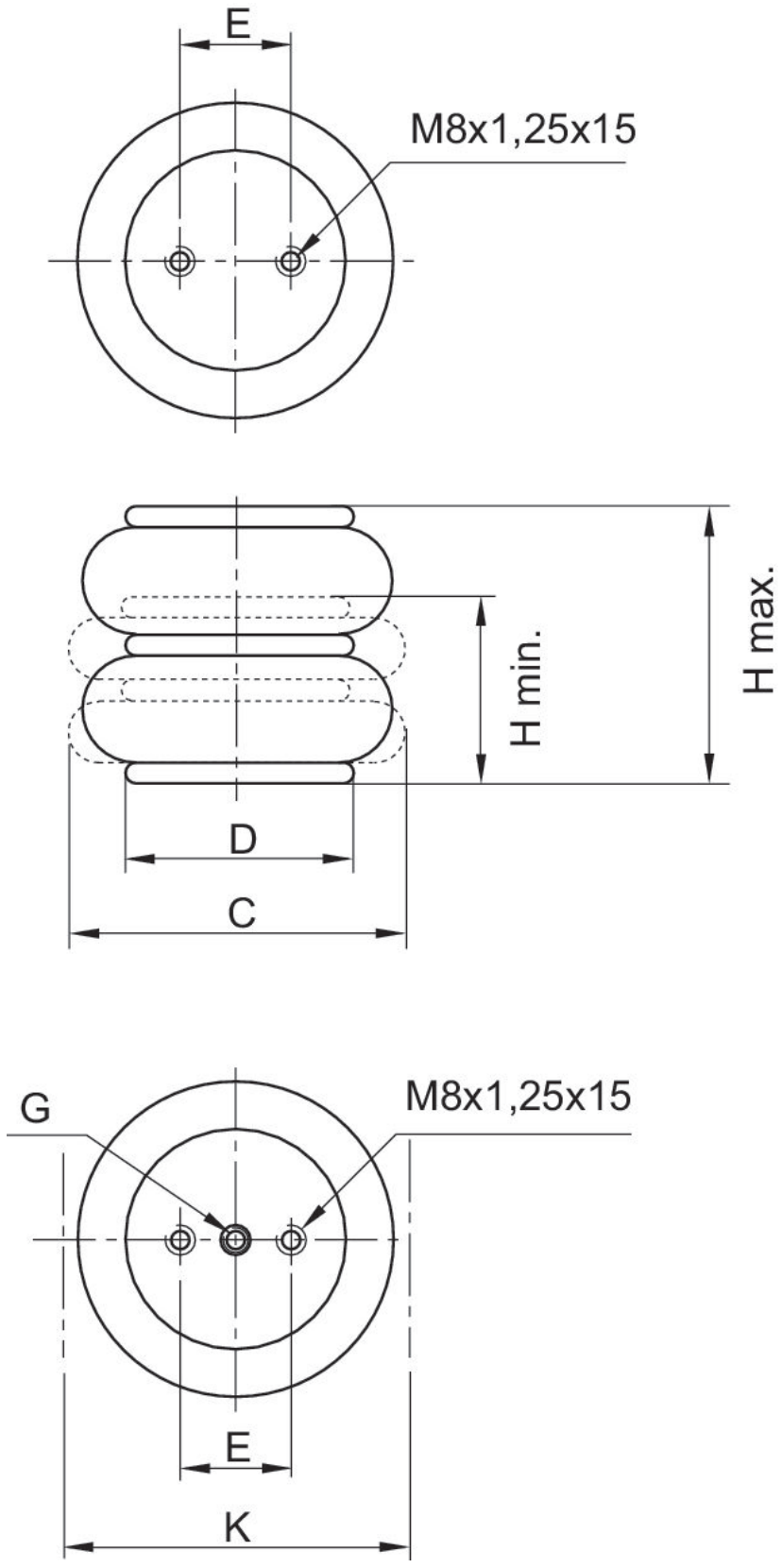

Bellow actuator with cover, series BCP, double, air connection between 3 mounting holes

1922161000

Part No.	Compressed air connection G	H min. mm	H max. mm	C mm	D mm	E ±0,5 [mm]	K mm	Min. return force N
0822419041	G 1/4	72	180	165	108	44.5	180	200
2999640000	G 1/4	72	195	203	141	70	215	200
0822419042	G 3/4	75	205	215	141	70	230	200
1922161000	G 3/4	77	230	218	141	70	235	200

Comment

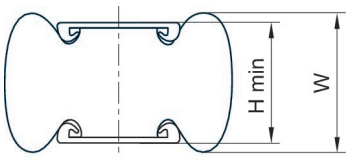

1) Once the minimum height H min. is reached, the bead height W can fall below the lower limit. If, for these products, level mounting surfaces greater than the cover diameter are selected, the return force and force output at the start of stroke increase. In the process, the rubber bellow is also compressed by the mounting surfaces. These products require more space upward, which can, in rare cases, present a hindrance. In any case, the specifications of the data sheets apply when using mounting surfaces in the size of the bellows actuator cover.
1 kN = 1000 N

Force-displacement diagram
1922161000

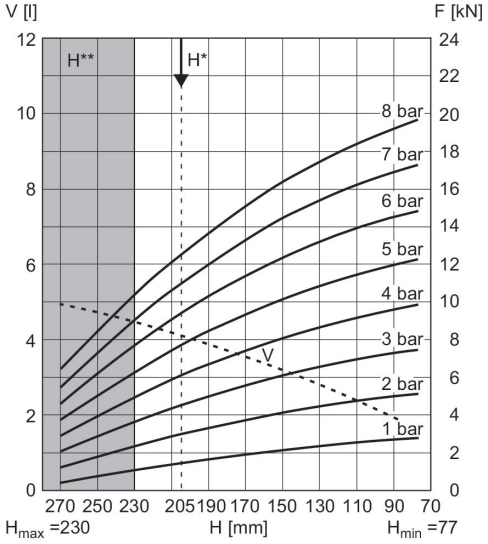

V = volume H = height H* = recommended operating height for vibration isolation H** = use permitted only upon approval by AVENTICS
1 kN = 1000 N