E21128

Mounting set for photoelectric sensors

O5 MOUNTING BRACKET

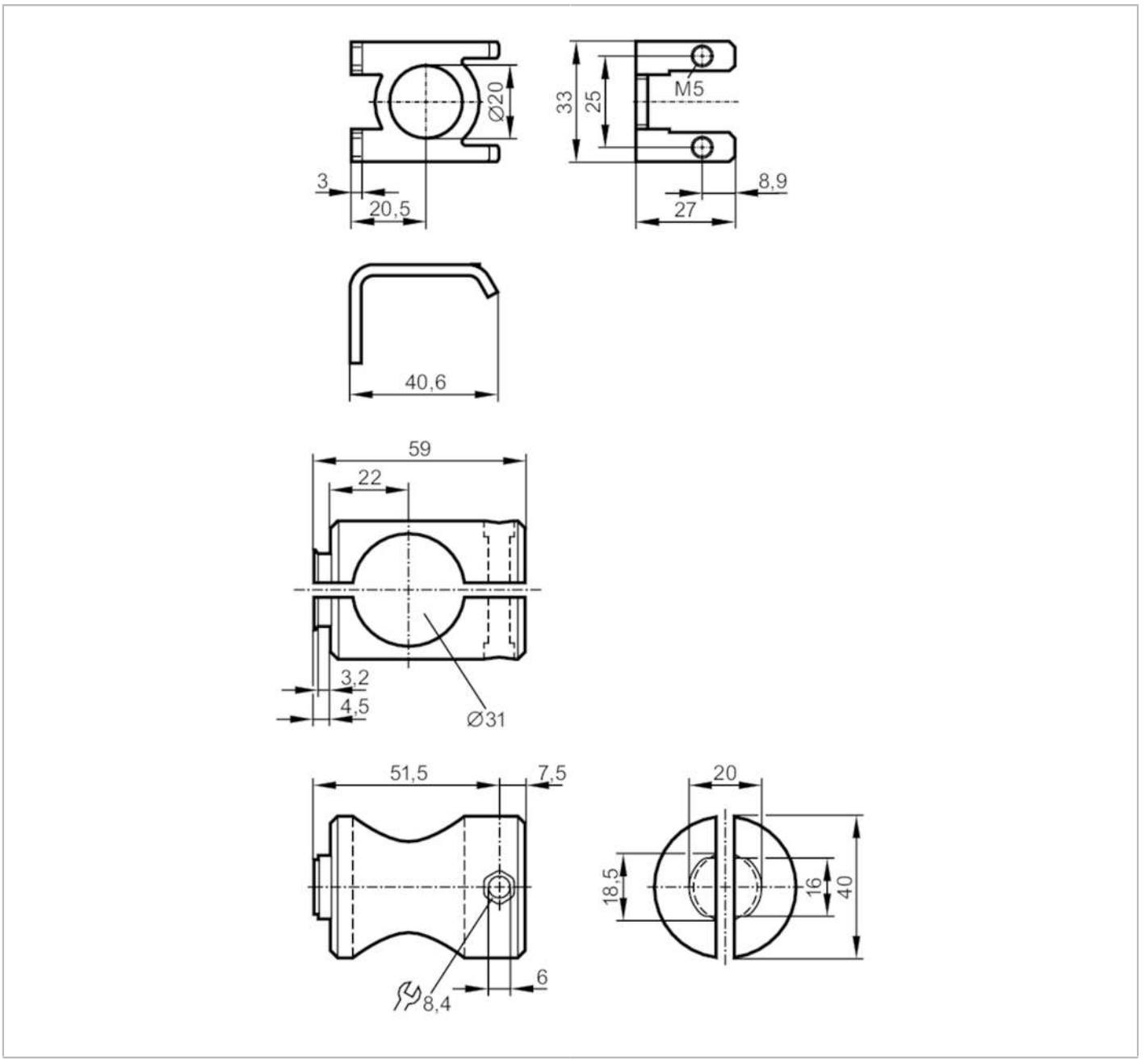

Application		
Design		clamp mounting
Mechanical data		
Weight	[g]	153.5
Type of mounting		Mounting rod; (Ø 30 mm)
Materials		fixture: stainless steel (1.4571/316Ti); Clamp: aluminium uncoloured anodised; screw: stainless steel; nut: stainless steel
Accessories		
Items supplied		socket head screw: 1 x M5 x 40
		socket head screws: 2 x M5 x 8
Remarks		
Pack quantity		1 pcs.