NU 310 ECJ

Popular item
SKF Explorer

Dimensions

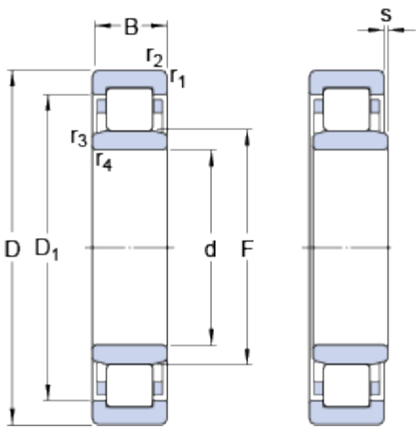

d		50	mm
D		110	mm
B		27	mm
D_1	≈	91.4	mm
F		65	mm
$r_{1,2}$	min.	2	mm
$r_{3,4}$	min.	2	mm
s	max.	1.9	mm

Abutment dimensions

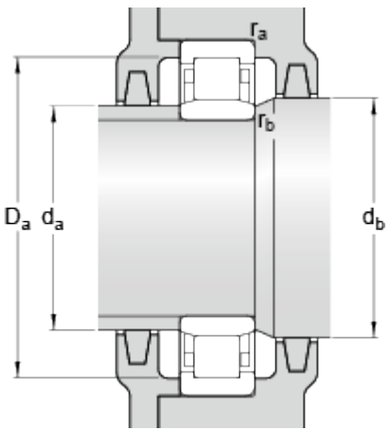

d_a	min.	60	mm
d_a	max.	63	mm
d_b	min.	67	mm
D_a	max.	99.6	mm
r_a	max.	2	mm
r_b	max.	2	mm

Calculation data

Basic dynamic load rating	C	127	kN
Basic static load rating	C_0	112	kN
Fatigue load limit	P_u	15	kN
Reference speed		6700	r/min
Limiting speed		8000	r/min
Calculation factor	k_r	0.15	
Limiting value	e	0.2	
Axial load factor	Y	0.6	

Mass

Mass bearing	1.18	kg

Associated products

Angle ring	HJ 310 EC