E11877

Mounting adapter for clean-line cylinders

ADAPT METAL CLEAN-LINE CYL

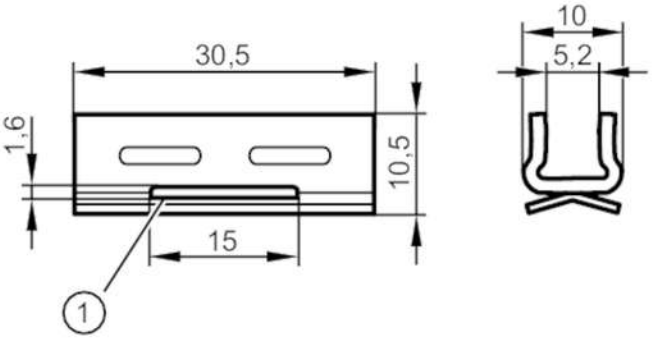

1 slot for fixing strap

Application		
Design		for types MKT
Mechanical data		
Weight	[g]	11.4
Dimensions	[mm]	10.5 x 30.5 x 10
Materials		stainless steel (1.4301 / 304)
Remarks		
Pack quantity		1 pcs.