KQ6006

Capacitive sensor

KQ-3120NFNKG/2T

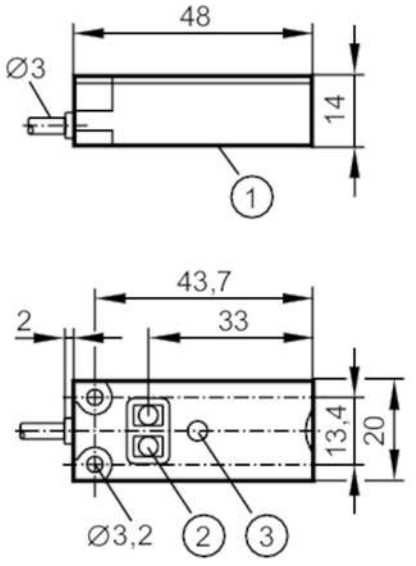

1 Sensing face
2 programming buttons
3 LED

Product characteristics		
Electrical design		NPN
Output function		normally open / normally closed; (selectable)
Sensing range	[mm]	12
Communication interface		IO-Link
Housing		rectangular
Dimensions	[mm]	20 x 14 x 48
Application		
Installation		detection through non-metallic container wall or on bypass pipes
Media		dry bulk material; liquids
Electrical data		
Operating voltage	[V]	10...30 DC
Current consumption	[mA]	< 17
Protection class		III
Reverse polarity protection		yes
Measuring principle		capacitive
Outputs		
Electrical design		NPN
Output function		normally open / normally closed; (selectable)
Max. voltage drop switching output DC	[V]	2.5
Permanent current rating of switching output DC	[mA]	100
Switching frequency DC	[Hz]	10
Short-circuit protection		yes

KQ6006

Capacitive sensor

KQ-3120NFNKG/2T

Overload protection		yes	
Detection zone			
Sensing range	[mm]	12	
Real sensing range Sr	[mm]	12 ± 10 %	
Accuracy / deviations			
Hysteresis	[% of Sr]	1...15	
Switch point drift	[% of Sr]	-20...20	
Interfaces			
Communication interface		IO-Link	
Transmission type		COM1 (4,8 kBaud)	
IO-Link revision		1.1	
SDCI standard		IEC 61131-9 CDV	
Profiles		Smart Sensor	
SIO mode		yes	
Supported DeviceIDs		Type of operation	DeviceID
		Default	371
Operating conditions			
Ambient temperature	[°C]	-25...80	
Protection		IP 65; IP 67; IP 69K	
Tests / approvals			
EMC		EN 61000-4-2	4 kV CD / 8 kV AD
		EN 61000-4-3	3 V/m
		EN 61000-4-4	2 kV
		EN 61000-4-6	3 ms
		EN 55011	class B
Vibration resistance			(10...55 Hz) / 1 mm amplitude, oscillation period 5 min., 30 min. per axis at resonance or 55 Hz
Shock resistance			30 g 6 shocks / 11 ms half-sine (x, y, z)
MTTF	[years]	623	
UL approval		Ta	-25...80 °C
		Enclosure type	Type 1
		power supply	Limited Voltage/Current
Mechanical data			
Weight	[g]	46.5	
Housing		rectangular	
Mounting		non-flush mountable	
Dimensions	[mm]	20 x 14 x 48	
Materials		housing: PBT glass fibre reinforced; pushbuttons: TPE-U; cover: PC glass fibre reinforced	
Displays / operating elements			
Display		switching status	1 x LED, yellow
Teach function		yes	
Electronic lock		yes	
Remarks			
Pack quantity		1 pcs.	

KQ6006

Capacitive sensor

KQ-3120NFNKG/2T

Electrical connection

Cable: 2 m, PVC; 3 x 0.14 mm²

Connection

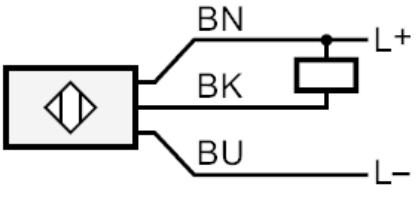

BK:	OUT / IO-Link
	Core colours :
BK =	black
BN =	brown
BU =	blue