PRODUCT DATASHEET

VSF SERIES



WORM**GEAR**REDUCER

DATE 06.11.2020

MOTOVARIO®
HEART OF MOTION
a TECO Group company

CONFIGURATION

CHARACTERISTIC	VALUE
Regulations	No
Worm	PAM NMRV
Size	050
Ratio (i)	20,0
Input Dim.	Ø105x14 (IEC 71 B14)
Hollow Output Shaft Dim.	Ø25
Double-Extended Worm Shaft	No
Mounting Position	U
VI-Output Oil Seal	NBR-Nitrile
VI-Input Oil Seal	ACM-Polyacrylate
VI-Output Bearings	Ball Bearings
VI-Lubrication	Eni Telium VSF 320
Paint	Ral 5010 Blue

DRAWINGS

Values expressed in [mm]

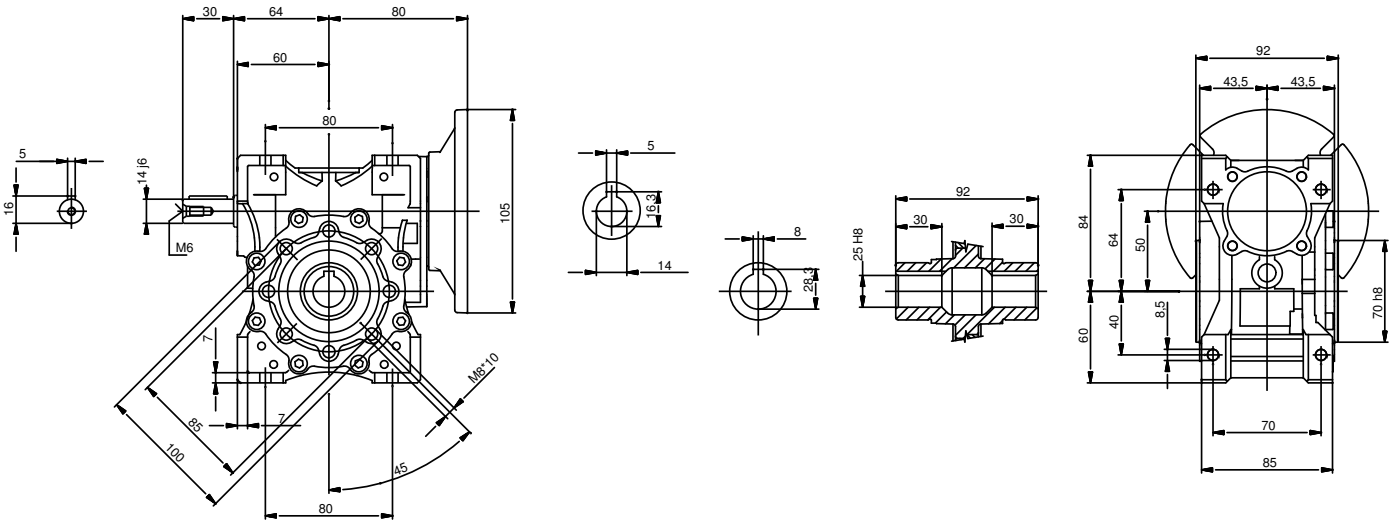

PERFORMANCES

NRV050

n1 [rpm]	Mn_2 [Nm]	i	Pn_1 [kW]	n2 [rpm]	Fr1 [N]	Fr2 [N]
500	100	20,00	0,35	25,0	490	3528
900	83	20,00	0,51	45,0	490	2900
1140	80	20,00	0,61	57,0	490	2680
1400	78	20,00	0,71	70,0	490	2503
1750	74	20,00	0,85	88,0	490	2324
2800	53	20,00	0,94	140,0	417	1987

MOUNTING POSITIONS

The mounting position of the gear unit identifies its space orientation. B3 mounting position, as from a technical point of view, ensures lower oil splash, better lubrication and less heating.

NMRV - NMRV-P - NRV - NRV-P

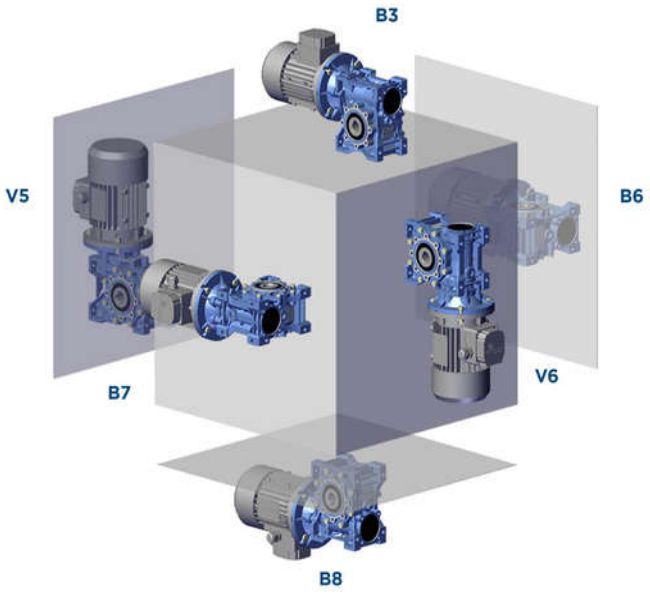

Execution

NMRV/NMRV-P+NMRV/NMRV-P - NRV/NRV-P+NMRV/NMRV-P

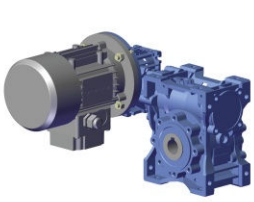
AS1


AS2


VS1


VS2

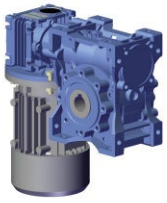
PS1


PS2


BS1

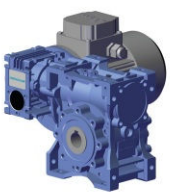
BS2

LUBRICANT

- The gear reducers size 025 - 030 - 040 - 050 - 063 - 075 - 090 - 105 - 110 - 130 - 150 are supplied complete with lubricant for life, synthetic oil, ENI TELIUM VSF. They can be mounted in any position envisaged in the catalogue, except for NMRV 090 - 110 and NRV 075-090-110 for which you must to specify the mounting position.
- For sizes 130 and 150 it is necessary to specify the position, otherwise the gear reducers are supplied with the quantity of oil relating to pos. B3.
- Only reduction units 130 and 150 are fitted with breather, level and oil drainage plugs.
- The pre-stage helical modules are supplied complete with life-long lubricant, synthetic oil, ENI TELIUM VSF. Lubrication is separated from that of the worm gear reducers.

It is recommended, after installation, to replace the closed plug used for transportation with the supplied breather plug.

Quantity of oil in litres ~

NMRV	025	030	040	050	130	150
B3	0,02	0,04	0,08	0,15	4,5	7
B8					3,3	5,1
B6-B7					3,5	5,4
V5					4,5	7
V6					3,3	5,1

NMRV-P	063	075	090	110
B3	0,33	0,55	1,15	1,6
B8				
B6-B7				
V5				
V6				

SW	030	040	050	063	075	090	105
B3	0,04	0,08	0,15	0,3	0,55	1	1,6
B8							
B6-B7							
V5							
V6							

HW	HW030		HW040	
	NMRV-P063	NMRV-P075	NMRV-P090	NMRV-P110
B3-B6-B7-B8-V5-V6	0,06	0,09	0,11	0,12

H	A31
B3-B5	0,07

NMRV	063	075	090	105	110
B3	0,3	0,55	1	1,6	3
B8					2,2
B6-B7					2,5
V5					3
V6					2,2

DIRECTION OF ROTATION

The worm screw rotation is right-handed.

DIRECTION OF ROTATION - HIGH SPEED SHAFT

NMRV - NRV - SW - ISW



MOUNTING POSITION **B3**

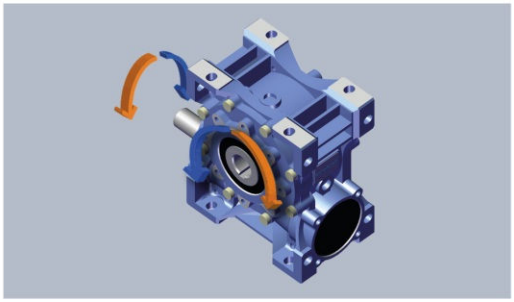

MOUNTING POSITION **B8**

NMRV + NMRV – SW + SW - NRV + NMRV – ISW + SW

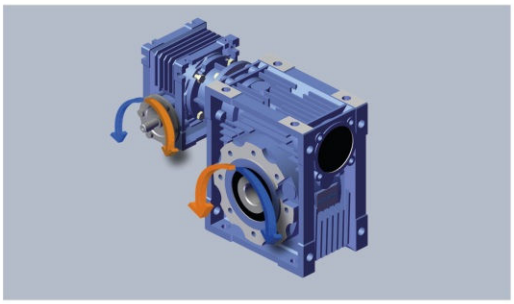

MOUNTING POSITION **AS1**

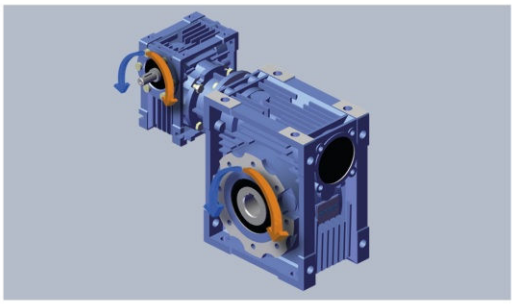

MOUNTING POSITION **BS1**