DATASHEET - SWD4-SML8-20



Switch cabinet bushing, SmartWire-DT, flat to round cable, plug

Part no.	**SWD4-SML8-20**
Catalog No.	**121381**
EL-Nummer (Norway)	**4520009**

Delivery program

Basic function accessories			switch cabinet bushing
Product range			SmartWire-DT accessories
Degree of Protection			IP20
For use with			SWD4-8SFF2-5

Technical data

General

Standards			IEC/EN 61131-2 EN 50178
Dimensions (W x H x D)		mm	35 x 83 x 46
Weight		kg	0.05
Mounting position			As required
Note on heat dissipation			not relevant

Ambient conditions, mechanical

Protection type (IEC/EN 60529, EN50178, VBG 4)			IP20
Vibrations (IEC/EN 61131-2:2008)			
Constant amplitude 3,5 mm		Hz	
constant amplitude 0.15 mm max.		Hz	8.4
constant amplitude 0.15 mm minim.		Hz	5
Constant acceleration 1 g		Hz	
constant acceleration 1 g max.		Hz	150
constant acceleration 1 g min.		Hz	8.4
Mechanical shock resistance (IEC/EN 60068-2-27) semi-sinusoidal 15 g/11 ms		Impacts	9
Free fall, packaged (IEC/EN 60068-2-32)		m	0.3

Electromagnetic compatibility (EMC)

Electrostatic discharge (IEC/EN 61131-2:2008)			
Air discharge (Level 3)		kV	8
Contact discharge (Level 2)		kV	4
Electromagnetic fields (IEC/EN 61131-2:2008)			
2 - 2.7 GHz		V/m	1
1.4 - 2 GHz		V/m	3
80 - 1000 MHz		V/m	10
Radiated RFI (IEC/EN 61131-2:2008, Level 3)		V	10

Climatic environmental conditions

Climatic proofing			Dry heat to IEC 60068-2-2 Damp heat as per EN 60068-2-3
Air pressure (operation)		hPa	795 - 1080
Ambient temperature			
Operation	ϑ	°C	-25 - +70
Storage / Transport	ϑ	°C	-40 - +70
Relative humidity			
Condensation			Take appropriate measures to prevent condensation
Relative humidity, non-condensing (IEC/EN 60068-2-30)		%	5 - 95

Connection options

Connection 1			M20 plug, 8 pole

Number of insertion cycles			≥ 500
Connection 2			Plug, 8-pole
Number of insertion cycles			≥ 200

Design verification as per IEC/EN 61439

Technical data for design verification			
Rated operational current for specified heat dissipation	I_n	A	0
Heat dissipation per pole, current-dependent	P_{vid}	W	0
Equipment heat dissipation, current-dependent	P_{vid}	W	0
Static heat dissipation, non-current-dependent	P_{vs}	W	0
Heat dissipation capacity	P_{diss}	W	0
Operating ambient temperature min.		°C	-25
Operating ambient temperature max.		°C	70
Degree of Protection			IP20
IEC/EN 61439 design verification			
10.2 Strength of materials and parts			
10.2.2 Corrosion resistance			Meets the product standard's requirements.
10.2.3.1 Verification of thermal stability of enclosures			Meets the product standard's requirements.
10.2.3.2 Verification of resistance of insulating materials to normal heat			Meets the product standard's requirements.
10.2.3.3 Verification of resistance of insulating materials to abnormal heat and fire due to internal electric effects			Meets the product standard's requirements.
10.2.4 Resistance to ultra-violet (UV) radiation			Meets the product standard's requirements.
10.2.5 Lifting			Does not apply, since the entire switchgear needs to be evaluated.
10.2.6 Mechanical impact			Does not apply, since the entire switchgear needs to be evaluated.
10.2.7 Inscriptions			Meets the product standard's requirements.
10.3 Degree of protection of ASSEMBLIES			Meets the product standard's requirements.
10.4 Clearances and creepage distances			Meets the product standard's requirements.
10.5 Protection against electric shock			Does not apply, since the entire switchgear needs to be evaluated.
10.6 Incorporation of switching devices and components			Does not apply, since the entire switchgear needs to be evaluated.
10.7 Internal electrical circuits and connections			Is the panel builder's responsibility.
10.8 Connections for external conductors			Is the panel builder's responsibility.
10.9 Insulation properties			
10.9.2 Power-frequency electric strength			Is the panel builder's responsibility.
10.9.3 Impulse withstand voltage			Is the panel builder's responsibility.
10.9.4 Testing of enclosures made of insulating material			Is the panel builder's responsibility.
10.10 Temperature rise			The panel builder is responsible for the temperature rise calculation. Eaton will provide heat dissipation data for the devices.
10.11 Short-circuit rating			Is the panel builder's responsibility.
10.12 Electromagnetic compatibility			Is the panel builder's responsibility.
10.13 Mechanical function			The device meets the requirements, provided the information in the instruction leaflet (IL) is observed.

Technical data ETIM 8.0

Programmable logic controllers PLC (EG000024) / Accessories/spare parts for controls (EC002584)			
Electric engineering, automation, process control engineering / Display and control component / Panel (HMI) / Panel (HMI, accessories) (ecl@ss10.0.1-27-33-02-92 [AFX005003])			
Type of electrical accessory/spare part			Plug
Type of mechanical accessory/spare part			Other
Accessory			Yes
Spare part			No

Approvals

UL File No.			E29184
UL Category Control No.			NKCR
CSA File No.			2324643
CSA Class No.			3211-07
North America Certification			UL listed, CSA certified

Specially designed for North America			No

Dimensions

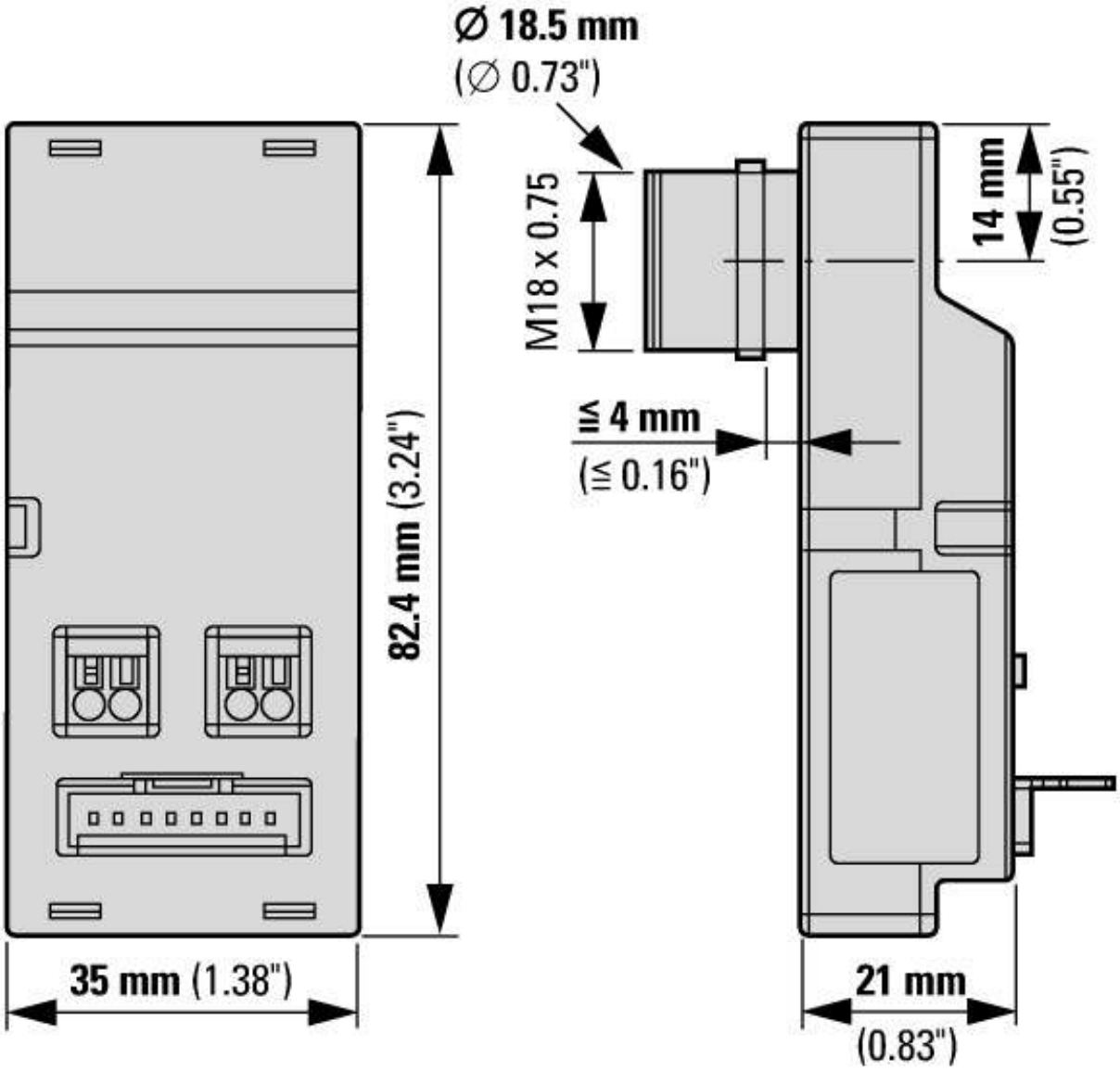

8 pole round cable (M20 plug) on ribbon cable (plug)

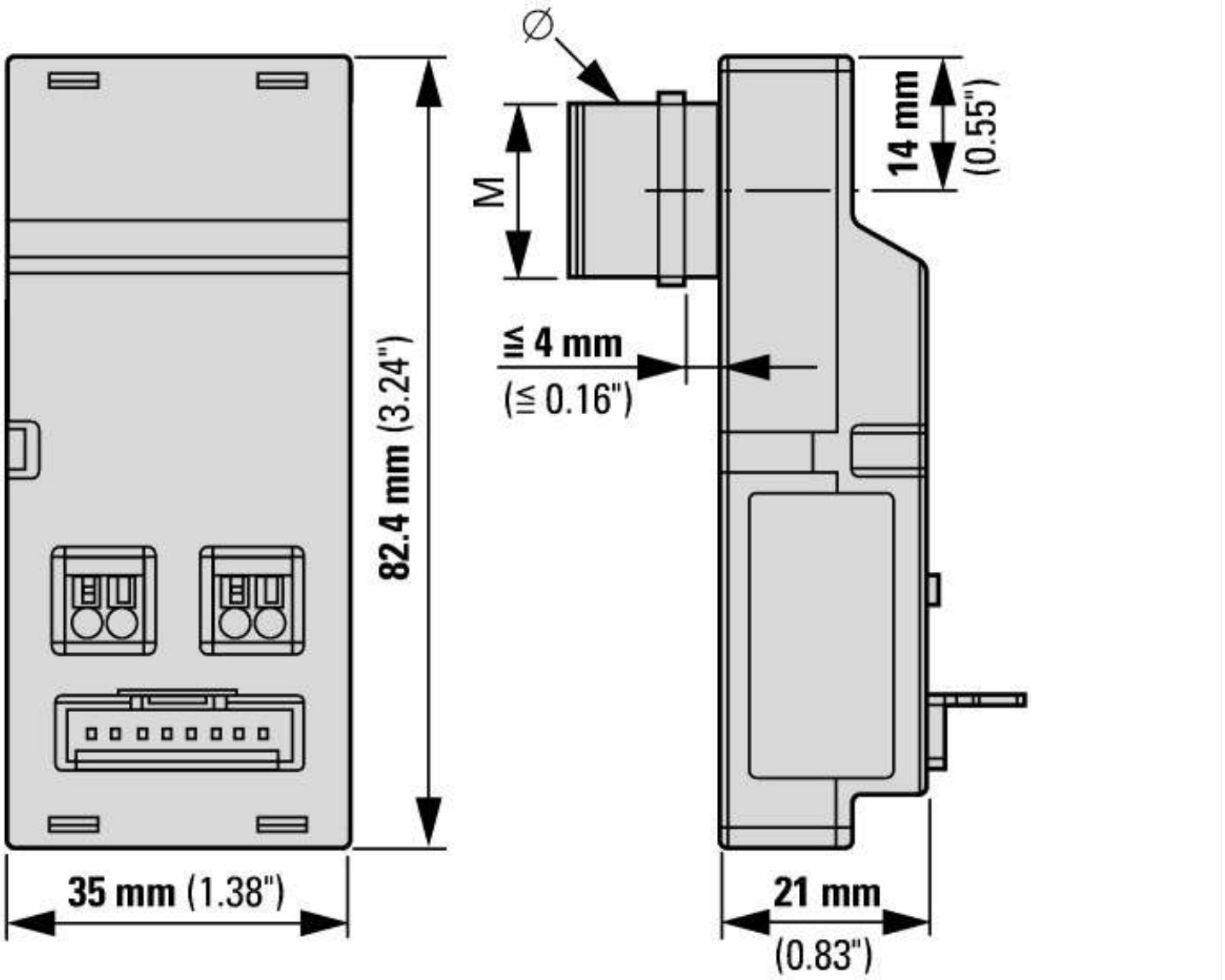

M18 x 0.75
∅ 18.5 mm (0.73")

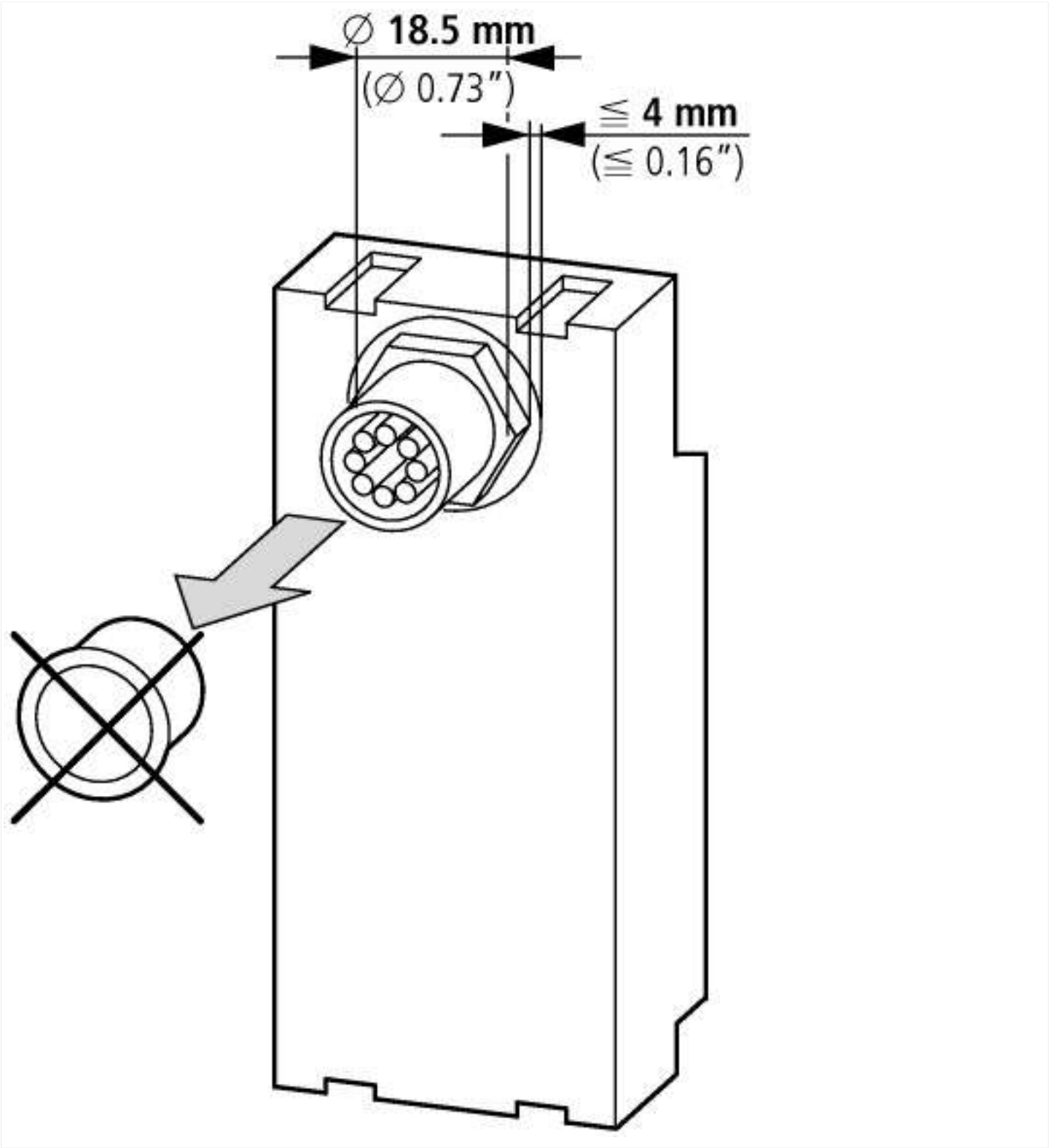

Additional product information (links)

Instruction leaflet "SWD4...: wiring material and accessories" IL04716001Z	
Instruction leaflet "SWD4...: wiring material and accessories" IL04716001Z	https://es-assets.eaton.com/DOCUMENTATION/AWA_INSTRUCTIONS/IL04716001Z.pdf
Instruction leaflet "SWD4...: wiring material and accessories" IL04716001Z	https://es-assets.eaton.com/DOCUMENTATION/AWA_INSTRUCTIONS/IL04716001Z2021_07.pdf
SmartWire-DT manual, The System MN05006002Z	
Handbuch SmartWire-DT, Das System MN05006002Z - Deutsch	https://es-assets.eaton.com/DOCUMENTATION/AWB_MANUALS/MN05006002Z_DE.pdf
SmartWire-DT manual, The System MN05006002Z - English	https://es-assets.eaton.com/DOCUMENTATION/AWB_MANUALS/MN05006002Z_EN.pdf
Manuale SmartWire-DT, il sistema MN05006002Z - italiano	https://es-assets.eaton.com/DOCUMENTATION/AWB_MANUALS/MN05006002Z_IT.pdf
SmartWire-DT product range catalog	http://ecat.moeller.net/flip-cat/?edition=SWKAT&startpage=Titel
f1=1457&f2=1181&f3=1530;Download Wizard SWD-ASSIST	http://applications.eaton.eu/sdlc?LX=11&amp

Product overview WEB)	http://www.eaton.eu/swd

© 07/2022 by Eaton Industries GmbH