HF18FF/HF18FH MINIATURE INTERMEDIATE POWER RELAY

c UL us
File No.:E133481

File No.:R50147087

CQC
File No.:CQC09002030026 (DC type)
CQC09002030027 (AC type)



Features

- Multiple auxiliary functions available
- 2 to 4 pole configurations
- Various terminals available
- Gold plated contact available
- Transparent dust cover ,various installation types
- Automatic production
- High capacity

RoHS compliant

CONTACT DATA

Contact arrangement	2C, 3C,4C
Contact resistance[1)]	100mΩ max.(at 1A 6VDC)
Contact material	see"ORDERING INFORMATION"
Contact rating (Res. load)	7A 250VAC/30VDC(2Z/3Z) 6A 250VAC/30VDC(4Z)
Max. switching voltage	250VAC / 30VDC
Max. switching current	7A(2Z/3Z),6A(4Z)
Max. switching power	1750VA/210W(2Z/3Z) 1500VA/180W(4Z)
Mechanical endurance	2 x 10^7OPS
Electrical endurance[2)]	1 x 10^5OPS(room temperature)

Notes: 1) The data shown above are initial values.
2) Please refer to the characteristic curves for detailed electrical endurance information.If you need other conditions,please contact us.

COIL

Coil power	DC type: Approx. 0.8W to 1.1W; AC type: Approx. 0.9VA to 1.5VA

CHARACTERISTICS

Insulation resistance		1000MΩ (at 500VDC)
Dielectric strength	Between coil & contacts	1500VAC 1min
	Between open contacts	1000VAC 1min
	Between contact sets	1500VAC 1min
Operate time (at nomi. volt.)		20ms max.
Release time (at nomi. volt.)		DC type:15ms max. AC type:25ms max. DC type (with diode): 25ms max.
Temperature rise (no-load, at nomi.volt.)[2)]		85K max.
Shock resistance	Functional	100m/s²
	Destructive	1000m/s²
Vibration resistance		10Hz to 55Hz 1mm DA
Humidity		5% to 85% RH
Ambient temperature		-40˚C to 70˚C
Termination		PCB, Plug-in
Unit weight		Approx. 35.6g
Construction		Dust protected

Notes: 1) The data shown above are initial values.
2) When testing the Temperature rise,please separate test each relay.

SAFETY APPROVAL RATINGS

UL/CUL	2 Form C/3 Form C	7A 250VAC/30VDC Resistive at 70˚C
	4 Form C	6A 250VAC/30VDC Resistive at 70˚C
TÜV	2 Form C/3 Form C	7A 250VAC/30VDC
	4 Form C	6A 250VAC/30VDC
CQC	2 Form C/3 Form C	7A 250VAC/30VDC
	4 Form C	6A 250VAC/30VDC

Notes: 1) All values unspecified are at room temperature.
2) Only typical loads are listed above. Other load specifications can be available upon request.

COIL DATA

at 23˚C

Voltage Code	Nominal Voltage VDC	Pick-up Voltage VDC max.[1)]	Drop-out Voltage VDC min.	Max. Voltage VDC[2)]	Coil Resistance Ω
005	5	4.0	0.5	5.5	28 x (1±10%)
006	6	4.8	0.6	6.6	40 x (1±10%)
009	9	7.2	0.9	9.9	90 x (1±10%)
012	12	9.6	1.2	13.2	160 x (1±10%)
021	21	16.8	2.1	23.1	490 x (1±10%)
024	24	19.2	2.4	26.4	640 x (1±10%)
030	30	24.0	3.0	33.0	1000 x (1±10%)
036	36	28.8	3.6	39.6	1440 x (1±10%)
048	48	38.4	4.8	52.8	2560 x (1±15%)
060	60	48.0	6.0	66.0	4000 x (1±15%)
110	110	80.0	11.0	121.0	12250 x (1±15%)
125	125	100.0	12.5	137.5	17360 x (1±15%)
220	220	176.0	22.0	242.0	53360 x (1±15%)

Voltage Code	Nominal Voltage VAC	Pick-up Voltage VDC max.[1)]	Drop-out Voltage VAC min.	Max. Voltage VAC[2)]	Coil Resistance Ω
6	6	4.8	1.8	6.6	11 x (1±10%)
12	12	9.6	3.6	13.2	44 x (1±10%)
24	24	19.2	7.2	26.4	177 x (1±10%)
36	36	28.8	10.8	39.6	400 x (1±10%)
48	48	38.4	14.4	52.8	708 x (1±10%)
60	60	48.0	18.0	66.0	1100 x (1±10%)
110	110[3)]	80.0	33.0	121	3400 x (1±15%)
120	120[3)]	88.0	36.0	132	4080 x (1±15%)
220	220[3)]	160.0	66.0	242	13600 x (1±15%)
230	230	176.0	72.0	253	16300 x (1±15%)
240	240[3)]	176.0	72.0	264	16300 x (1±15%)
277	277	221.6	83.1	304.7	23590 x (1±15%)

Notes: 1) Under ambient temperature, applying more than 80% of rating voltage to coil, relay will take action accordingly. But in order to meet the stated product performance, please apply rated voltage to coli.
2) Maximum voltage refers to the maximum voltage which relay coil could endure in a short period of time.
3) A110:Nominal Voltage(100~110)Va.c.;A120:Nominal Voltage(110~120)Va.c.;A220:Nominal Voltage(200~220)Va.c.; A240:Nominal Voltage(220~240)Va.c.;110:Nominal Voltage(100~110)Va.c.;125:Nominal Voltage(110~125)Va.c.
4) When the 240Va.c. specification coil test coil temperature rises, the installation pitch needs to be ⩾6mm.

ORDERING INFORMATION

	HF18FF	/A	240	-2Z	1	3	G	D	(XXX)

Type — **HF18FF:** without button; **HF18FH:** with button

Coil voltage form — **A:** AC(50Hz or 60Hz); **Nil:** DC

Coil voltage — See "COIL DATA"

Contact arrangement — **2Z:** 2 Form C **3Z:** 3 Form C **4Z:** 4 Form C

Mounting Termination (See the following) — **1:** Socket **2:** PCB **5**[1)]**:** Flange-Mounting

Contact material — **3:** AgNi **T:** $AgSnO_2$

Contact plating — **Nil:** No gold plated **G:** Gold plated

Component code[5)] — **Nil:** Without Component **D:** with LED **J:** with diode **DJ:** with LED and diode

Special code[6)] — **XXX:** Customer special requirement **Nil:** Standard

Notes: 1) HF18FH without Flange-Mounting Termination,Please choose HF18FF when ordering.
2) Free-wheeling diode is available for DC coil relay, CR circuit is available for AC coil relay.
3) The customer's special requirement express as special code after evaluating by Hongfa.
4) We can provide (136) Economic model relays, the specific performance is subject to the Specifications Data Sheet, please contact us.
5) For coil specifications of 110VDC and above, it is recommended that the customer add the coil protection measures in the circuit.
6) For products that should meet the explosion-proof requirements of "IEC 60079 series",please note [Ex] after the specification while placing orders.Not all products have explosion-proof certification,so please contact us if necessary.

OUTLINE DIMENSIONS, WIRING DIAGRAM AND PC BOARD LAYOUT

Unit: mm

Outline Dimensions

HF18FF/□□-2Z1□□□□

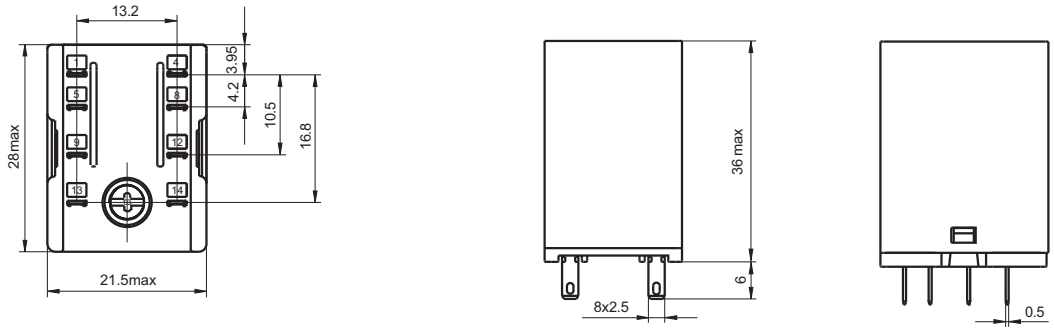

HF18FF/□□-2Z2□□□□

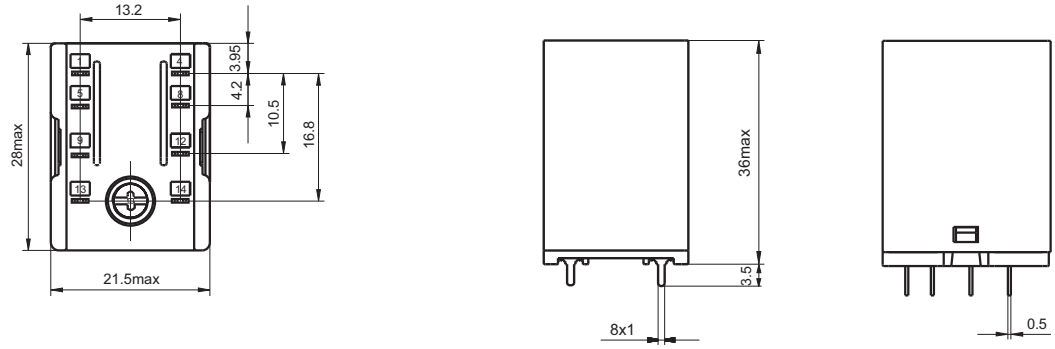

HF18FF/□□-2Z5□□□□

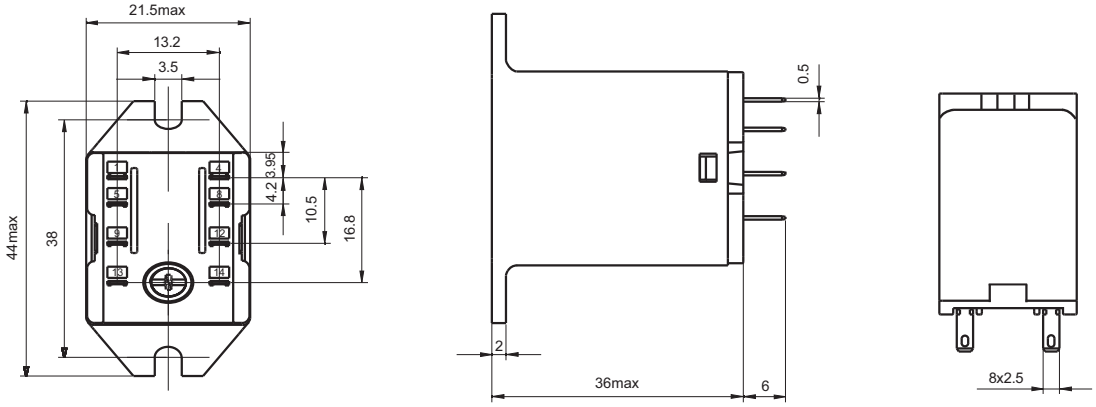

OUTLINE DIMENSIONS, WIRING DIAGRAM AND PC BOARD LAYOUT

Unit: mm

Outline Dimensions

HF18FF/□□-3Z1□□□□

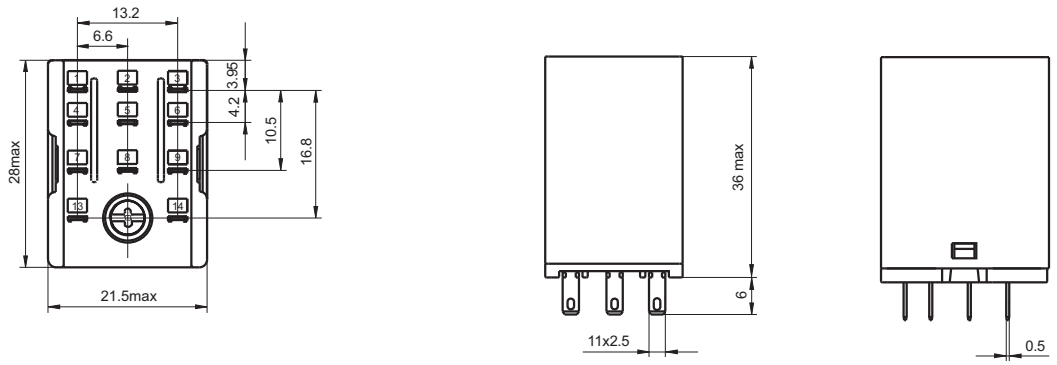

HF18FF/□□-3Z2□□□□

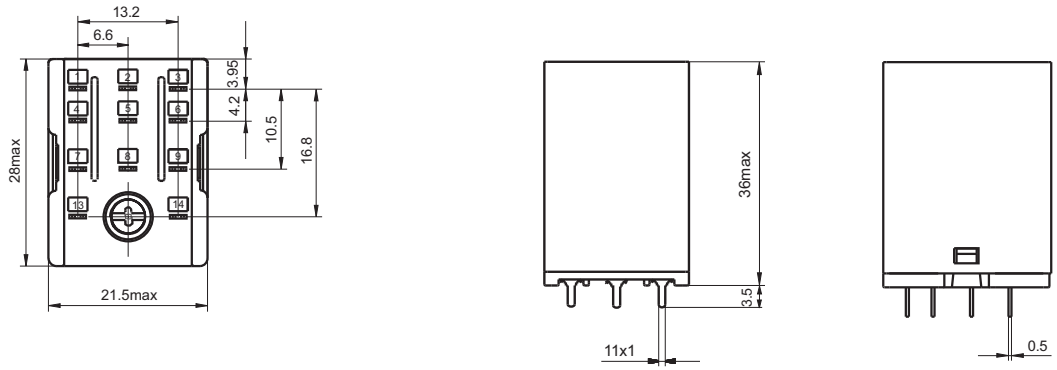

HF18FF/□□-3Z5□□□□

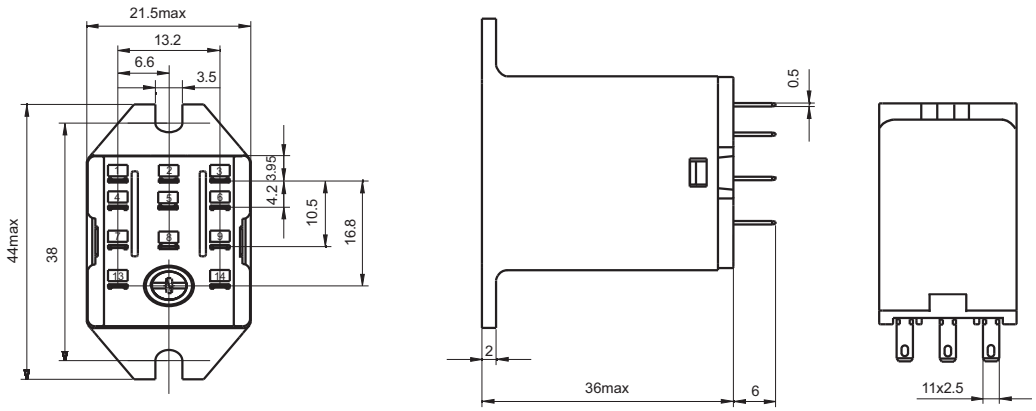

OUTLINE DIMENSIONS, WIRING DIAGRAM AND PC BOARD LAYOUT

Unit: mm

Outline Dimensions

HF18FF/□□-4Z1□□□□

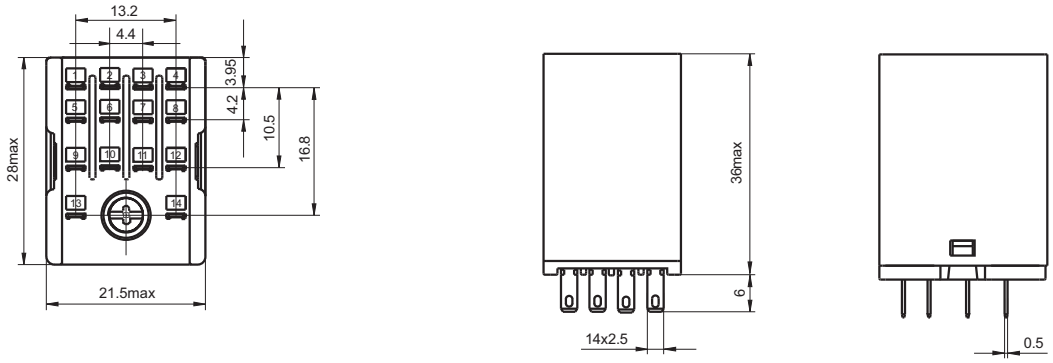

HF18FH/□□-4Z2□□□□

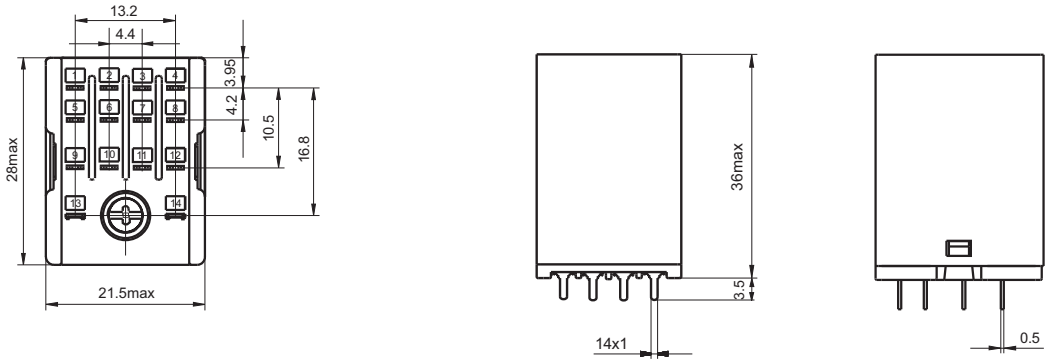

HF18FF/□□-4Z5□□□□

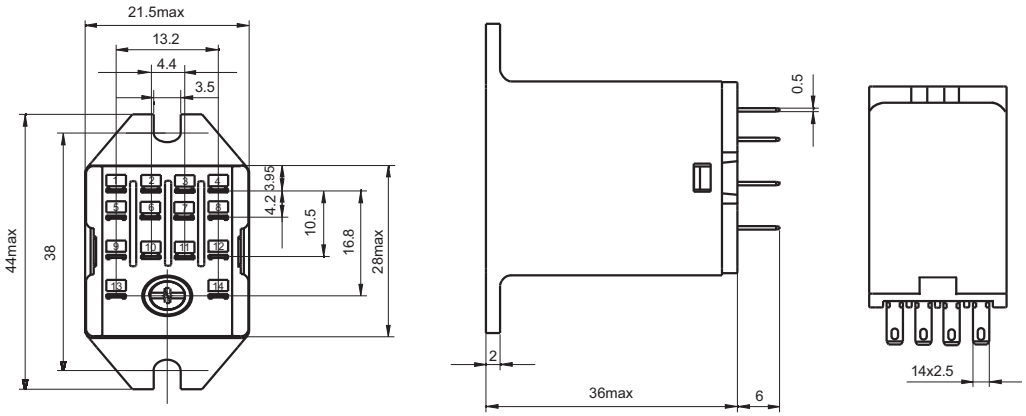

OUTLINE DIMENSIONS, WIRING DIAGRAM AND PC BOARD LAYOUT

Unit: mm

Outline Dimensions

HF18FH/□□-2Z1□□□□

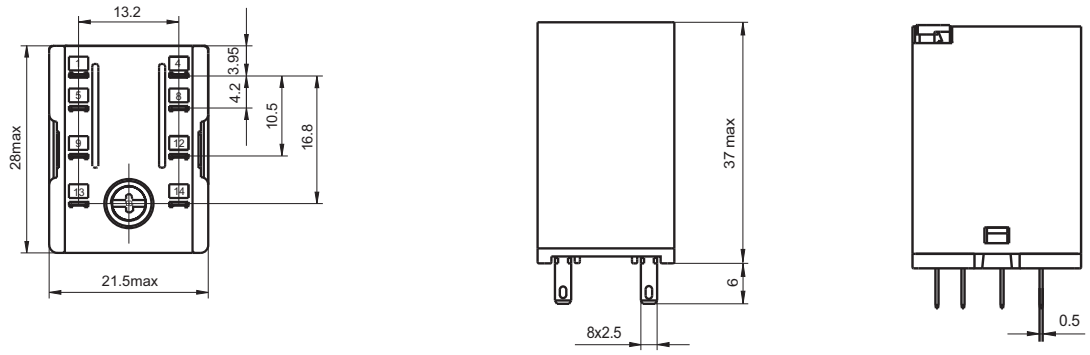

HF18FH/□□-2Z2□□□□

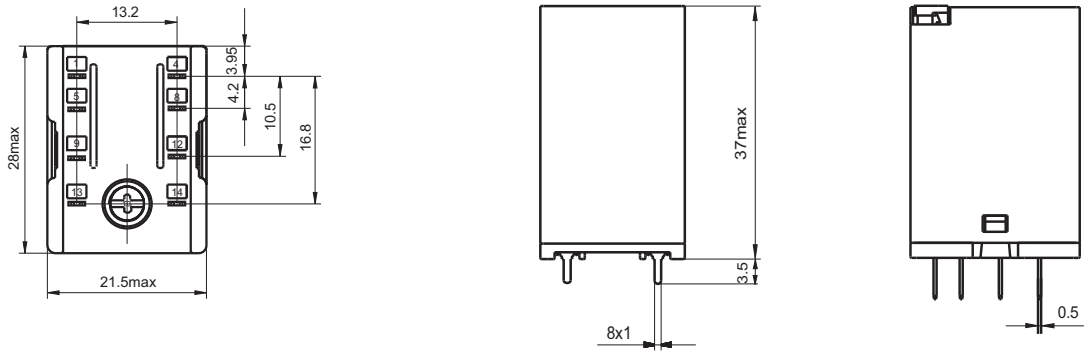

HF18FH/□□-3Z1□□□□

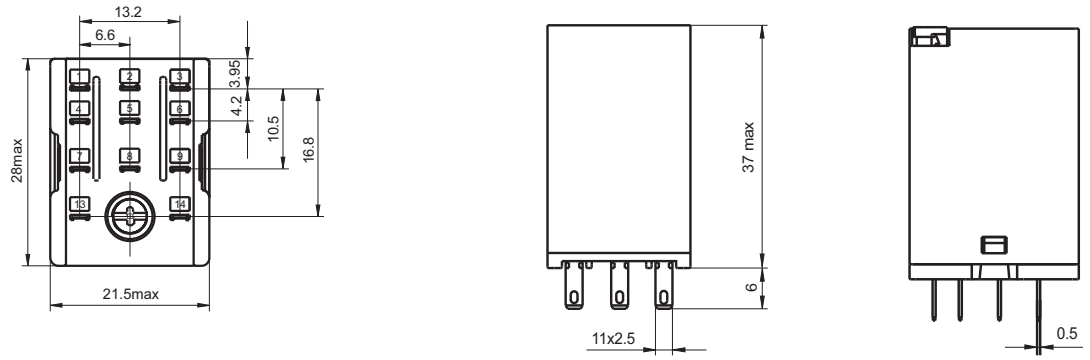

OUTLINE DIMENSIONS, WIRING DIAGRAM AND PC BOARD LAYOUT

Unit: mm

Outline Dimensions

HF18FH/□□-3Z2□□□□

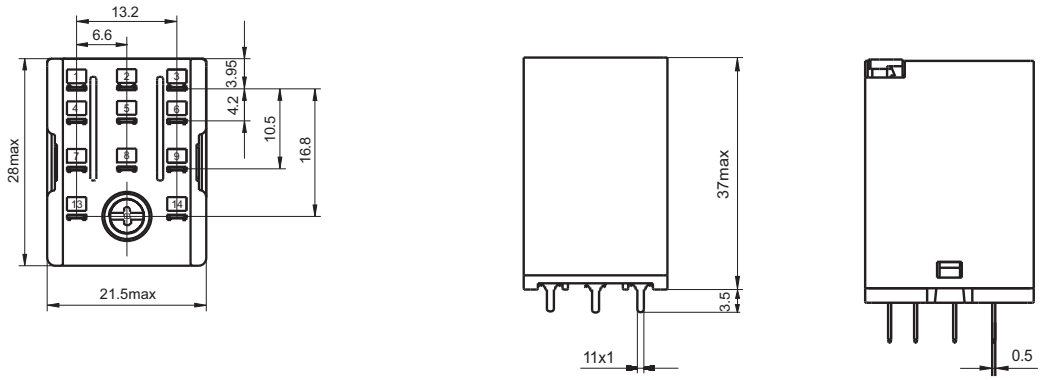

HF18FH/□□-4Z1□□□□

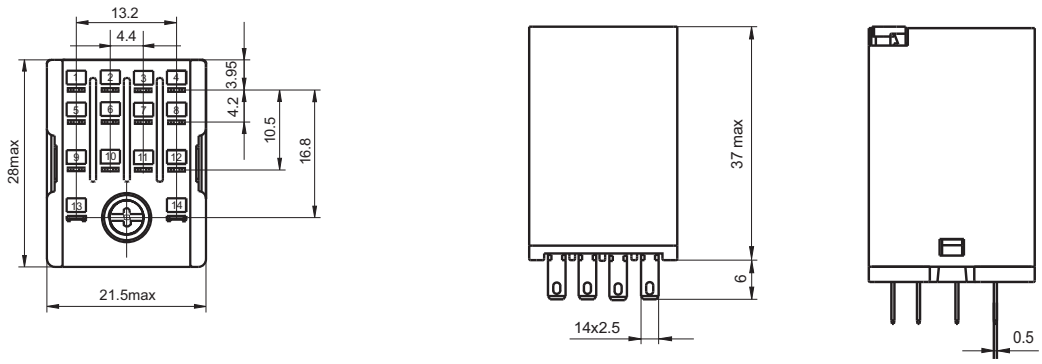

HF18FH/□□-4Z2□□□□

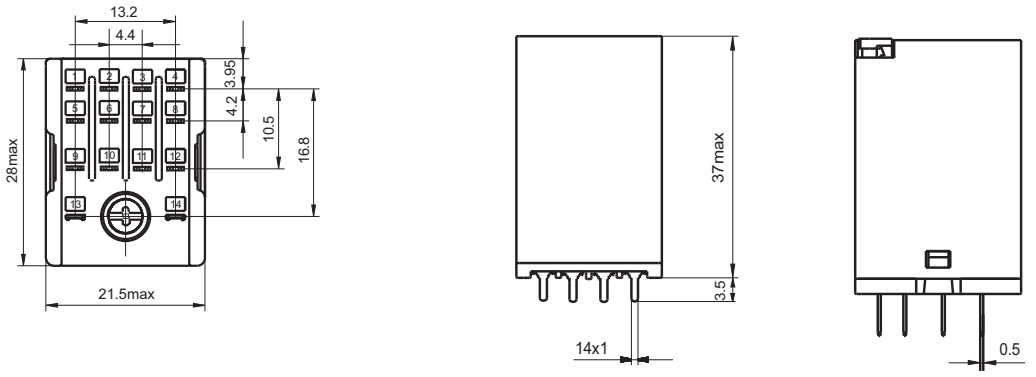

OUTLINE DIMENSIONS, WIRING DIAGRAM AND PC BOARD LAYOUT

Unit: mm

PCB Layout

(Bottom view)

2 Form C

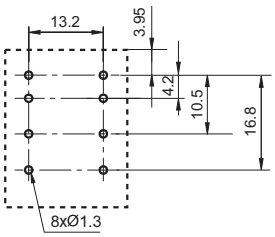

3 Form C

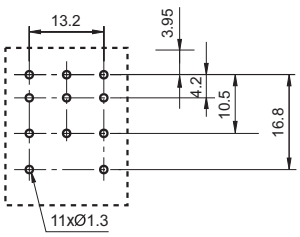

4 Form C

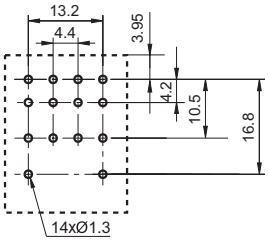

Mounting Holes

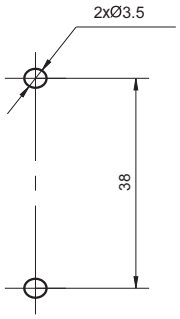

Wiring Diagram

(Bottom view)

2 Form C

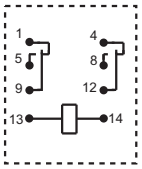

3 Form C

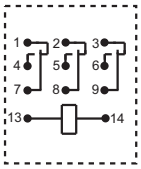

4 Form C

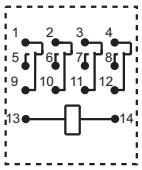

2 Form C (With LED)

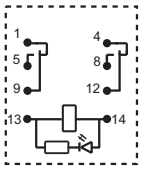

3 Form C (With LED)

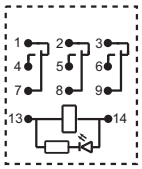

4 Form C (With LED)

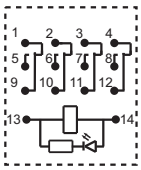

2 Form C
(DC, With fly-wheel diode)

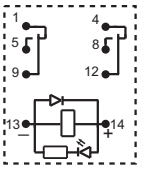

3 Form C
(DC, With fly-wheel diode)

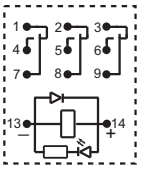

4 Form C
(DC, With fly-wheel diode)

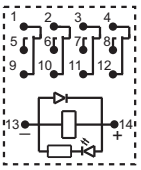

Remark: 1) In case of no tolerance shown in outline dimension: outline dimension ≤1mm, tolerance should be ±0.2mm; outline dimension >1mm and ≤5mm, tolerance should be ±0.3mm; outline dimension >5mm, tolerance should be ±0.4mm.
2) The tolerance without indicating for PCB layout is always ±0.1mm.
3) DC products with fly-wheel diode,please confirm the positive and negative terminals before wiring.

CHARACTERISTIC CURVES

MAXIMUM SWITCHING POWER
(2 Form C/3 Form C)

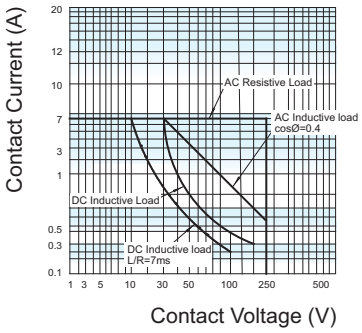

MAXIMUM SWITCHING POWER
(4 Form C)

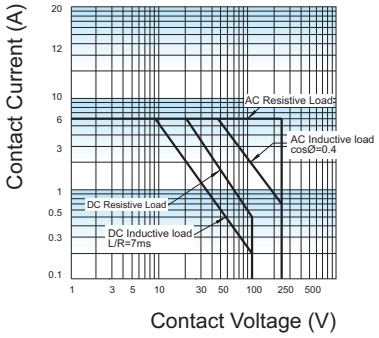

RES. LOAD ENDURANCE CURVE
(2 Form C/3 Form C)

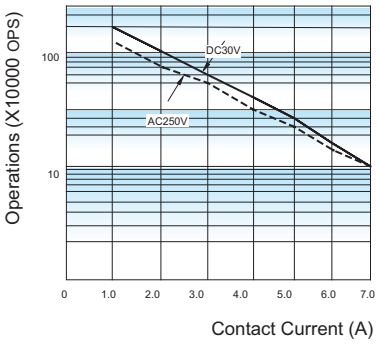

RES. LOAD ENDURANCE CURVE
(4 Form C)

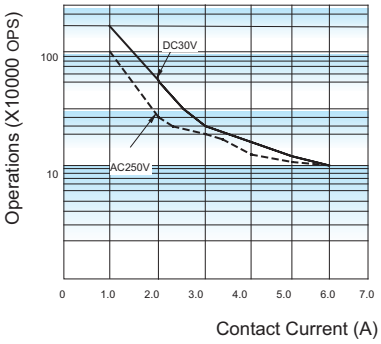

INDUCTIVE LOAD ENDURANCE CURVE
(2 Form C/3 Form C)

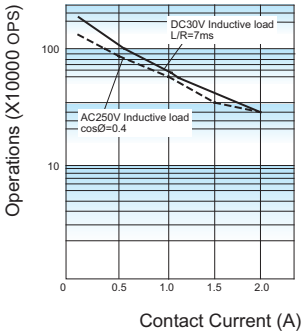

INDUCTIVE LOAD ENDURANCE CURVE
(4 Form C)

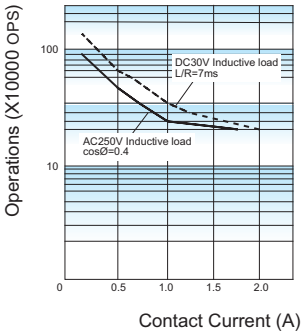

Relay Sockets

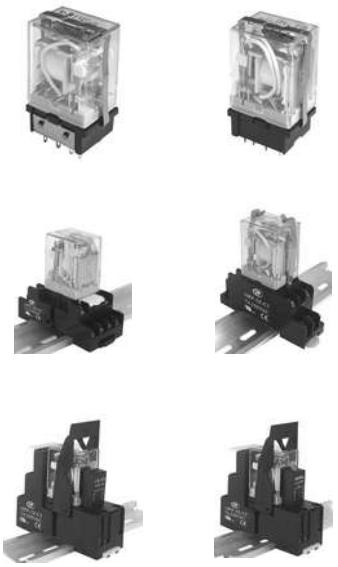

File No.: E253370

Features

- The dielectric strength can reach 2000VAC and the insulation resistance is 1000MΩ
- Three mounting types are available: PCB mounting screw mounting and DIN rail mounting.
- With finger protection device
- Many kinds of plug-in modules are available with the function of energizing indication and wiring protection.
- Components available: retainer, marker and plug-in module

RoHS compliant

CHARACTERISTICS

Type	Nominal Voltage	Nominal Current	Ambient Temperature	Dielectric Strength min.	Screw Torque	Wire Strip Length	Unit weight
18FF-2Z-A2	250VAC	7A	-40 ˚C to 70˚C	2000VAC	—	—	Approx.8g
18FF-2Z-C1	250VAC	7A	-40 ˚C to 70˚C	2000VAC	0.8N · m	7mm	Approx.35g
18FF-2Z-C2	250VAC	7A	-40 ˚C to 70˚C	2000VAC	0.8N · m	7mm	Approx.36g
18FF-2Z-C4	250VAC	7A	-40 ˚C to 70˚C	2000VAC	0.6N · m	7mm	Approx.53g
18FF-2Z-C5	250VAC	7A	-40 ˚C to 70˚C	2000VAC	0.6N · m	7mm	Approx.64g
18FF-2Z-C8	250VAC	7A	-40 ˚C to 70˚C	2000VAC	0.6N · m	7mm	Approx.41g
18FF-2Z-C9	250VAC	7A	-40 ˚C to 70˚C	2000VAC	—	7mm	Approx.70g
18FF-3Z-C4	250VAC	7A*	-40 ˚C to 70˚C	2000VAC	0.6N · m	7mm	Approx.59g
18FF-3Z-C5	250VAC	7A*	-40 ˚C to 70˚C	2000VAC	0.6N · m	7mm	Approx.71g
18FF-4Z-A2	250VAC	7A*	-40 ˚C to 70˚C	2000VAC	—	—	Approx.8g
18FF-4Z-C1	250VAC	7A*	-40 ˚C to 70˚C	2000VAC	0.8N · m	7mm	Approx.58g
18FF-4Z-C2	250VAC	7A*	-40 ˚C to 70˚C	2000VAC	0.8N · m	7mm	Approx.59g
18FF-4Z-C4	250VAC	7A*	-40 ˚C to 70˚C	2000VAC	0.6N · m	7mm	Approx.64g
18FF-4Z-C5	250VAC	7A*	-40 ˚C to 70˚C	2000VAC	0.6N · m	7mm	Approx.76g
18FF-4Z-C8	250VAC	7A*	-40 ˚C to 70˚C	2000VAC	0.6N · m	7mm	Approx.51g
18FF-4Z-C9	250VAC	7A*	-40 ˚C to 70˚C	2000VAC	—	7mm	Approx.81g

Remark: For sockets marked *, their group of current totally should be not more than 20A.

CHARACTERISTICS

Type	Nominal Voltage	Nominal Current	Ambient Temperature	Dielectric Strength min.	Screw Torque	Wire Strip Length	Unit weight
18FZ-2Z-C2	250VAC	7A	-40 ˚C to 70˚C	2000VAC	0.8N · m	7mm	Approx.30g
18FZ-4Z-C2	250VAC	5A	-40 ˚C to 70˚C	2000VAC	0.8N · m	7mm	Approx.44g
18FF-2Z-C1(734)	250VAC	12A	-40 ˚C to 70˚C	2000VAC	0.8N · m	7mm	Approx.35g
18FF-2Z-C2(734)	250VAC	12A	-40 ˚C to 70˚C	2000VAC	0.8N · m	7mm	Approx.36g
18FF-2Z-C4(734)	250VAC	12A	-40 ˚C to 70˚C	2000VAC	0.6N · m	7mm	Approx.53g
18FF-2Z-C5(734)	250VAC	12A	-40 ˚C to 70˚C	2000VAC	0.6N · m	7mm	Approx.64g
18FF-3Z-C5(734)	250VAC	10A	-40 ˚C to 70˚C	2000VAC	0.6N · m	7mm	Approx.71g

Remark: For sockets marked *, their group of current totally should be not more than 20A.

OUTLINE DIMENSIONS, WIRING DIAGRAM AND PC BOARD LAYOUT

Unit: mm

Socket	Outline Dimensions	Wiring Diagram	PCB Layout	Components Available
18FF-2Z-A2  PCB Terminal, PCB mounting Applicable for 2 poles	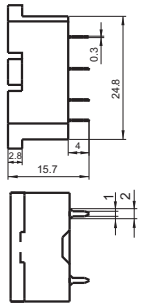 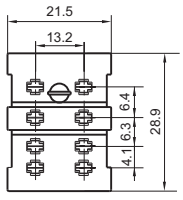 (Top View)		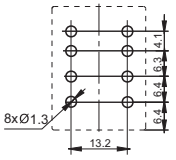	metallic retainer 18FF-H1
18FF-2Z-C1 18FF-2Z-C1(734)  Screw Terminal, DIN rail or Screw mounting, Without finger protection device Applicable for 2 poles	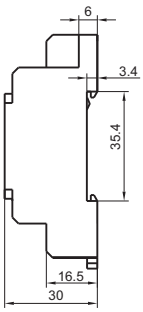 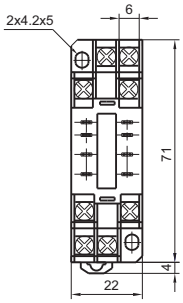 (Top View)	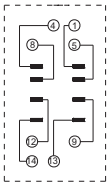 (Top View)	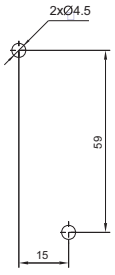	metallic retainer 18FF-H2 (be used in sets)

OUTLINE DIMENSIONS, WIRING DIAGRAM AND PC BOARD LAYOUT

Unit: mm

Socket	Outline Dimensions	Wiring Diagram	PCB Layout	Components Available
18FF-2Z-C2 18FF-2Z-C2(734)  Screw Terminal, DIN rail or Screw mounting, With finger protection device Applicable for 2 poles	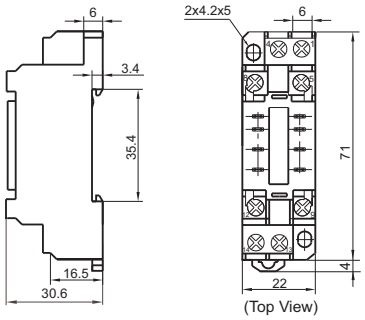	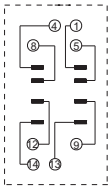 (Top View)	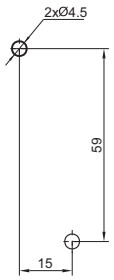	metallic retainer 18FF-H2 (be used in sets)
18FF-2Z-C4 18FF-2Z-C4(734)  Screw Terminal, DIN rail or Screw mounting, With finger protection device Applicable for 2 poles	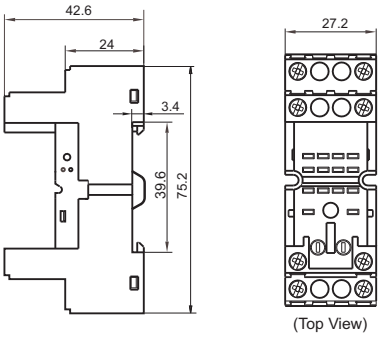	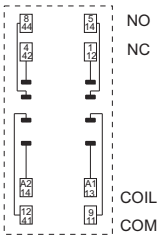 (Top View)	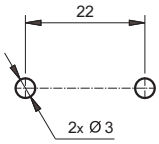	plastic retainer 18FF-H4 metallic retainer 18FF-H5 marker 18FF-M1 plug-in module HFAA to HFHU*
18FF-2Z-C5 18FF-2Z-C5(734)  Screw Terminal, DIN rail or Screw mounting, With finger protection device Applicable for 2 poles	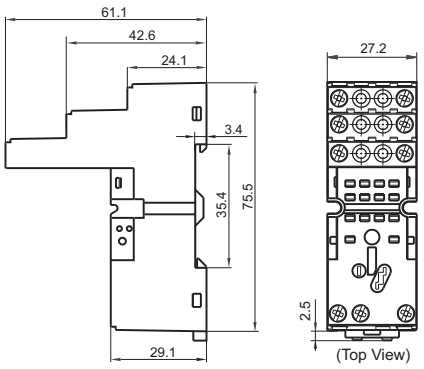	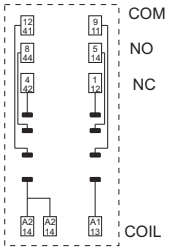 (Top View)	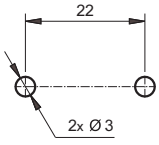	plastic retainer 18FF-H4 metallic retainer 18FF-H5 marker 18FF-M1 plug-in module HFAA to HFHU*
18FF-2Z-C8  Screw Terminal, DIN rail or Screw mounting, With finger protection device Applicable for 2 poles	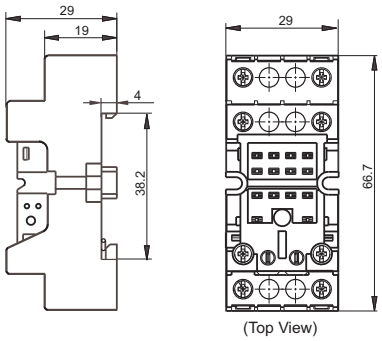	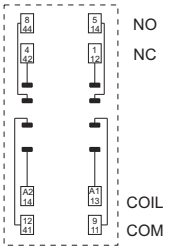 (Top View)	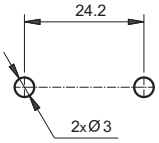	plastic retainer 18FF-H4 metallic retainer 18FF-H5 marker 18FF-M3 plug-in module HFAA to HFHU*

OUTLINE DIMENSIONS, WIRING DIAGRAM AND PC BOARD LAYOUT

Unit: mm

Socket	Outline Dimensions	Wiring Diagram	PCB Layout	Components Available
18FF-2Z-C9  Spring-loaded terminal DIN rail mounting With finger protection device Applicable for 2 poles	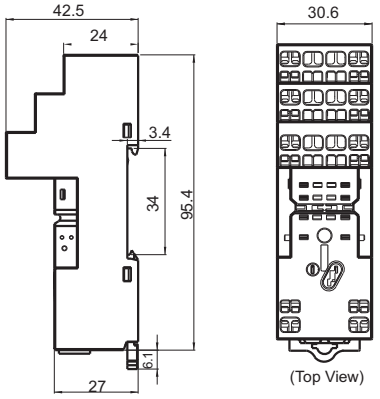	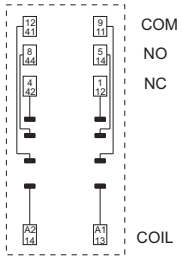		plastic retainer 18FF-H4 metallic retainer 18FF-H5 plug-in module HFAA ~ HFHU* marker 18FF-M3
18FF-3Z-C4  Screw Terminal, DIN rail or Screw mounting, With finger protection device Applicable for 3 poles	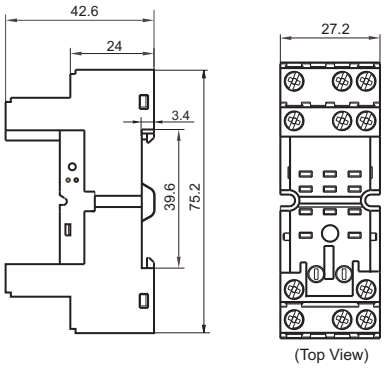	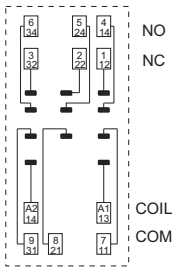	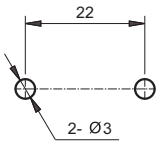	plastic retainer 18FF-H4 metallic retainer 18FF-H5 marker 18FF-M1 plug-in module HFAA to HFHU*
18FF-3Z-C5 18FF-3Z-C5(734)  Screw Terminal, DIN rail or Screw mounting, Witht finger protection device Applicable for 3 poles	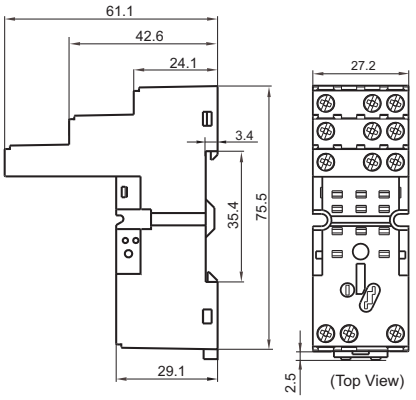	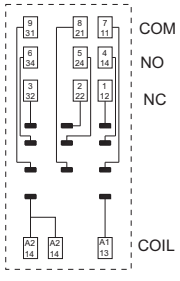	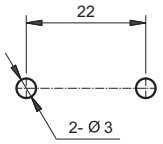	plastic retainer 18FF-H4 metallic retainer 18FF-H5 marker 18FF-M1 plug-in module HFAA to HFHU*
18FF-4Z-A2  PCB Terminal, PCB mounting Applicable for 4 poles	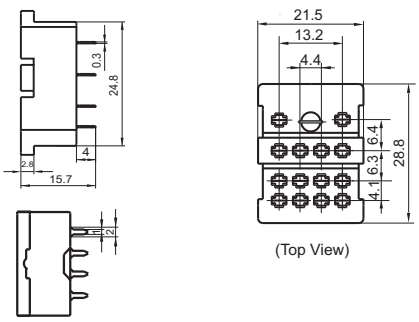		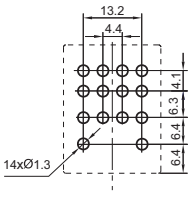	metallic retainer 18FF-H1

OUTLINE DIMENSIONS, WIRING DIAGRAM AND PC BOARD LAYOUT

Unit: mm

Socket	Outline Dimensions	Wiring Diagram	PCB Layout	Components Available
18FF-4Z-C1  Screw Terminal, DIN rail or Screw mounting, Withtout finger protection device Applicable for 4 poles	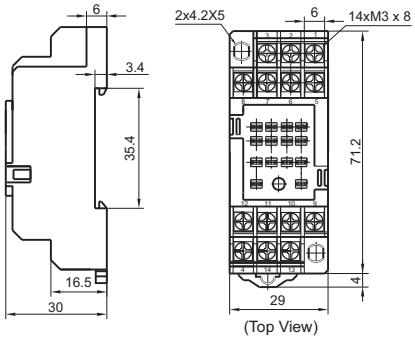	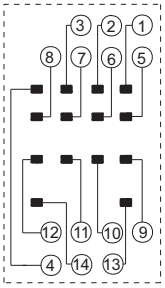 (Top View)	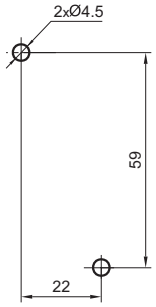	metallic retainer 18FF-H2 (be used in sets)
18FF-4Z-C2  Screw Terminal, DIN rail or Screw mounting, With finger protection device Applicable for 4 poles	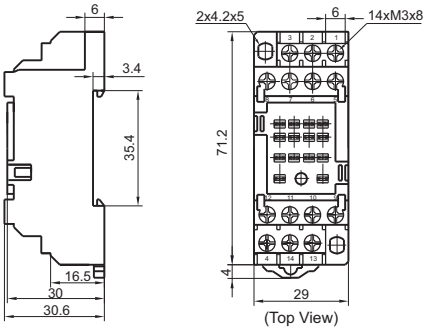	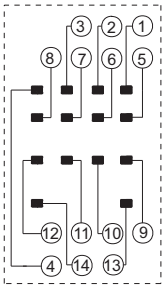 (Top View)	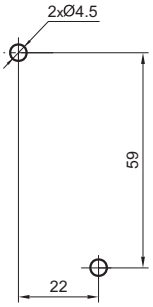	metallic retainer 18FF-H2 (be used in sets)
18FF-4Z-C4  Screw Terminal, DIN rail or Screw mounting, With finger protection device Applicable for 4 poles	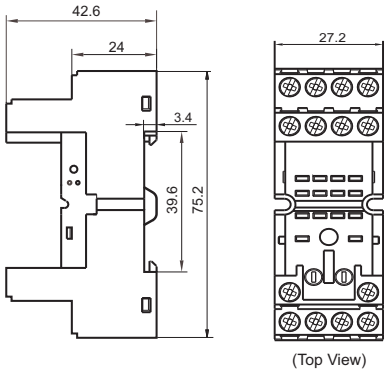	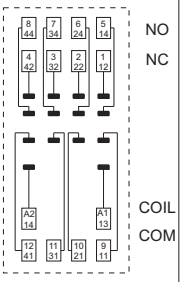 (Top View)	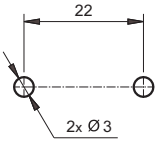	plastic retainer 18FF-H4 metallic retainer 18FF-H5 marker 18FF-M1 plug-in module HFAA to HFHU*
18FF-4Z-C5  Screw Terminal, DIN rail or Screw mounting, With finger protection device Applicable for 4 poles	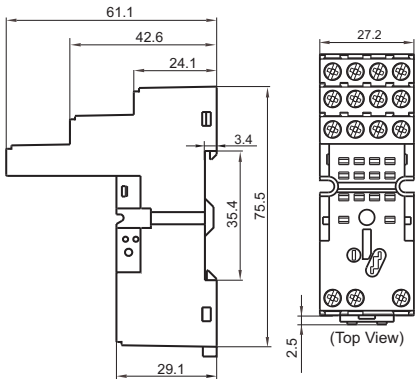	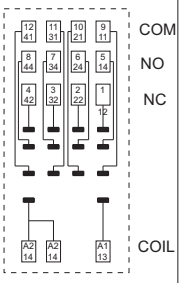 (Top View)	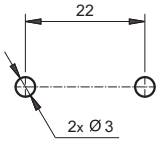	plastic retainer 18FF-H4 metallic retainer 18FF-H5 marker 18FF-M1 plug-in module HFAA to HFHU*

OUTLINE DIMENSIONS, WIRING DIAGRAM AND PC BOARD LAYOUT

Unit: mm

Socket	Outline Dimensions	Wiring Diagram	PCB Layout	Components Available
18FF-4Z-C8  Screw Terminal, DIN rail or Screw mounting, With finger protection device Applicable for 4 poles	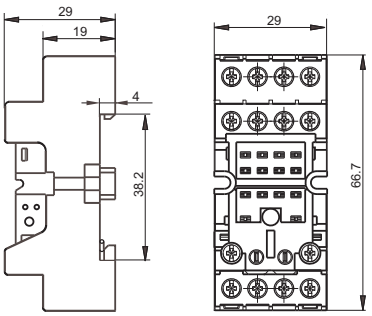 (Top View)	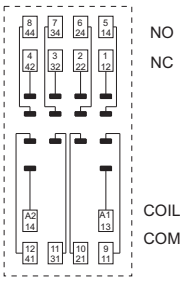 (Top View)	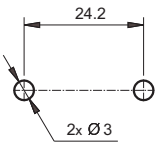	*plastic retainer 18FF-H4 *metallic retainer 18FF-H5 marker 18FF-M3 *plug-in module HFAA to HFHU
18FF-4Z-C9  Spring-loaded terminal DIN rail mounting With finger protection device Applicable for 2 poles	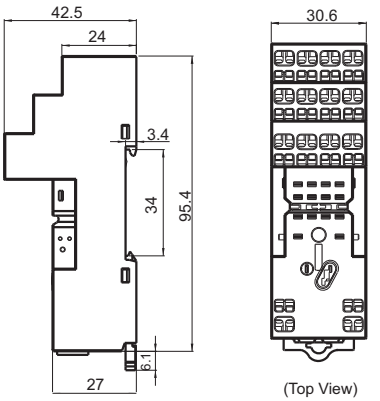 (Top View)	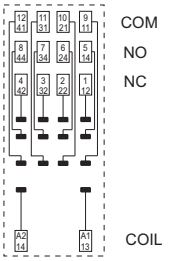 (Top View)		plastic retainer 18FF-H4 metallic retainer 18FF-H5 plug-in module HFAA ~ HFHU* marker 18FF-M3
18FZ-2Z-C2  Screw Terminal, DIN rail or Screw mounting, With finger protection device	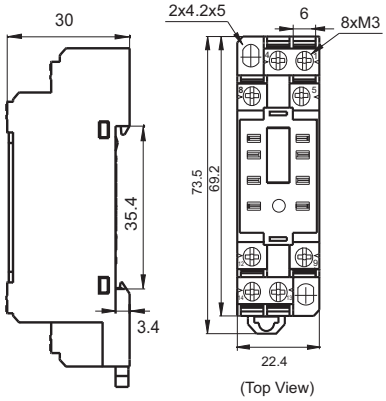 (Top View)	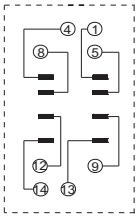 (Top View)	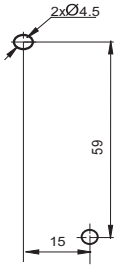	metallic retainer 18FF-H2 (Used in pairs）
18FZ-4Z-C2  Screw Terminal, DIN rail or Screw mounting, With finger protection device	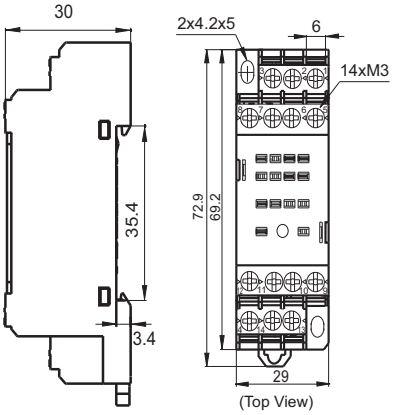 (Top View)	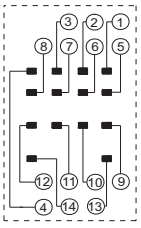 (Top View)	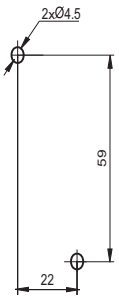	*metallic retainer 18FF-H2 (be used in sets)

Notes: * Please refer to the product datasheet if plug-in module is required.

DIMENSION OF RELATED COMPOENT (AVAILABLE)

Unit: mm

Retainer

18FF-H1 (Metallic retainer)

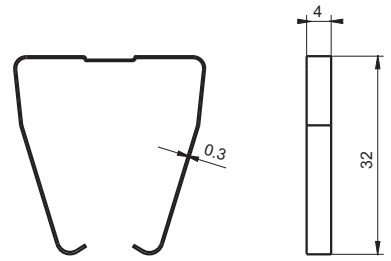

18FF-H2 (Metallic retainer)

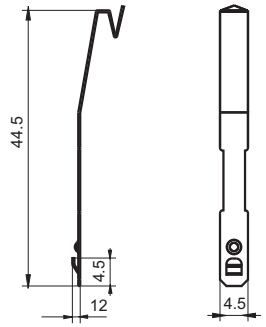

18FF-H4 (Plastic retainer)

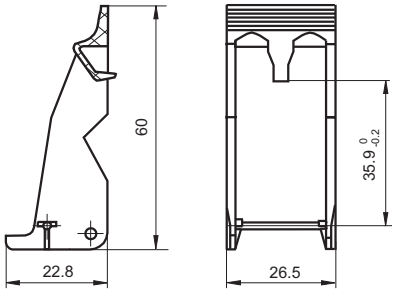

18FF-H5 (Metallic retainer)

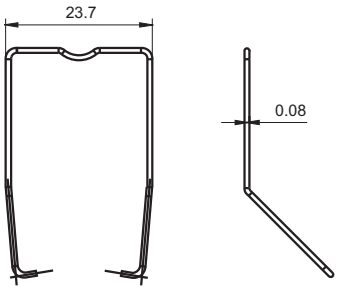

Marker

18FF-M1

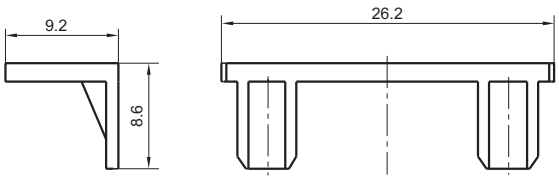

18FF-M3

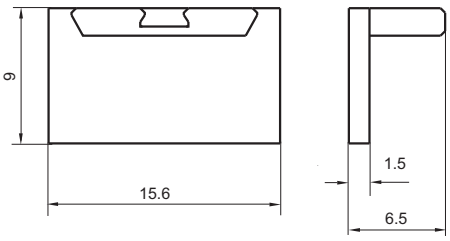

SELECTION OF PARTS

Type of Relay	Mounting termination	Socket	Retainer	Marker	Module
HF18FF/□ □ -2Z1□ □ □	without button	18FF-2Z-A2	18FF-H1	-	-
		18FF-2Z-C1	18FF-H2		
		18FF-2Z-C2			
		18FZ-2Z-C2			
		18FF-2Z-C4	18FF-H4/H5	18FF-M1	HFAA~HFHU
		18FF-2Z-C5			
		18FF-2Z-C8		18FF-M3	
		18FF-2Z-C9			
HF18FF/□ □ -3Z1□ □ □		18FF-3Z-C4		18FF-M1	
		18FF-3Z-C5			
HF18FF/□ □ -4Z1□ □ □		18FF-4Z-A2	18FF-H1	-	-
		18FF-4Z-C1	18FF-H2		
		18FF-4Z-C2			
		18FZ-4Z-C2			
		18FF-4Z-C4	18FF-H4/H5	18FF-M1	HFAA~HFHU
		18FF-4Z-C5			
		18FF-4Z-C8		18FF-M3	
		18FF-4Z-C9			
HF18FH/□ □ -2Z1□ □ □	with button	18FF-2Z-C4	18FF-H4/H5	18FF-M1	
		18FF-2Z-C5			
		18FF-2Z-C8			
		18FF-2Z-C9		18FF-M3	
HF18FH/□ □ -3Z1□ □ □		18FF-3Z-C4			
		18FF-3Z-C5		18FF-M1	
		18FF-4Z-C4			
HF18FH/□ □ -4Z1□ □ □		18FF-4Z-C5			
		18FF-4Z-C8		18FF-M1	
		18FF-4Z-C9		18FF-M3	
HF18FF-G/□ □ -2Z1□ □ □	without button	18FF-2Z-C1(734)	18FF-H2	-	-
		18FF-2Z-C2(734)			
		18FF-2Z-C4(734)	18FF-H4/H5	18FF-M1	HFAA~HFHU
		18FF-2Z-C5(734)			
HF18FF-G/□ □ -3Z1□ □ □		18FF-3Z-C5(734)			
HF18FH-G/□ □ -2Z1□ □ □	with button	18FF-2Z-C4(734)			
		18FF-2Z-C5(734)			
HF18FH-G/□ □ -3Z1□ □ □		18FF-3Z-C5(734)			

Precautions For Use

For your personal safety and the normal operation of the equipment, as well as to prevent fire, please note the following issues :

1.The rated current of the socket should be no less than the rated current of the relay.

2.Sockets are required to be firmly fixed to prevent the wiring from loosening and affecting the quality of wiring.

3.Be sure to disconnect power to the outlet before installation, disassembly, wiring, maintenance and inspection.

4.Prevent foreign objects such as wire shavings from falling inside this product when wiring.

5.Be sure to install the relay in place, and use accessories such as retainer if necessary to improve contact reliability. Do not use with incomplete connections.

6.Be sure to observe the relay ratings and do not overload the relay.

7.Before selecting a relay, make sure that the drive voltage matches the relay excitation voltage.

Precautions for the use of non-threaded terminal type sockets

1.Lead end socket description:

18FF-2Z/4Z-C9

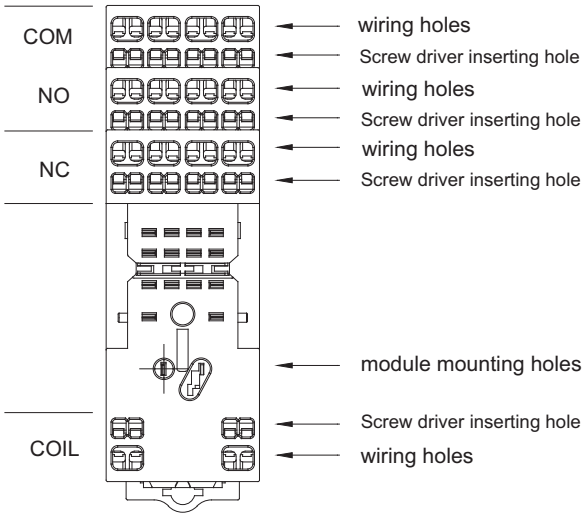

Figure 1

2.Things to be noticed when selecting soft wiring.

· The soft wiring can be divided into the following types.

0.5mm^2 above 1.5mm^2 below or AWG20 above AWG16 below the stranded wire or a single wire.

The front terminal of the wire needs to be peeled off 8mm to 9mm of insulation protection layer, the wire insulation protection layer diameter *2.8mm or less. Please be sure to use according to this size.

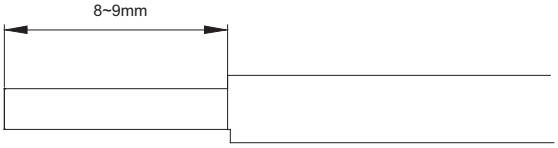

Figure 2

Precautions For Use

• If the protective layer is stripped too short, the wire may be pulled out, and if it is too long, it may be short-circuited to the neighboring wires. If using the stranded wire with cold crimped terminals, please twist the stranded wire tightly before use to avoid loosening the wire.
When wiring, use a screwdriver as shown in the figure.

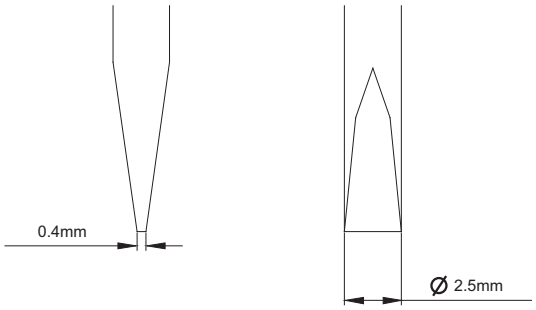

Figure 3

• The insertion position of the wire and the screwdriver and the insertion direction of the screwdriver are as shown in Figure 4.

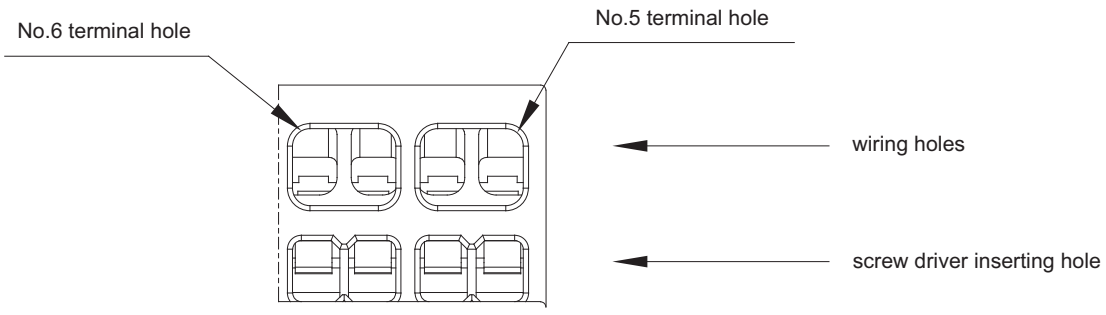

Figure 4

Precautions For Use

• When using stranded wires, use cold crimp terminals with or without plastic sleeves for the stranded wires.

• The method of Wiring as shown in figure 5.

Step 1. Insert the screwdriver into the screwdriver insertion hole (square hole) of the socket so that the screwdriver is inserted in a slightly angled direction until the head of the screwdriver is between the back of the spring terminal and the wall of the cover.

Step 2. Keep pushing the screwdriver in until it contacts the stop position inside the socket and the junction is released, keeping the screwdriver in that position. The screwdriver will not come off even if the hand is released.

Step 3. Keeping the screwdriver in the insertion hole, insert the wire or cold crimp terminal to the bottom of the wire insertion hole.

Step 4. Pull out the screwdriver and the wiring is completed.

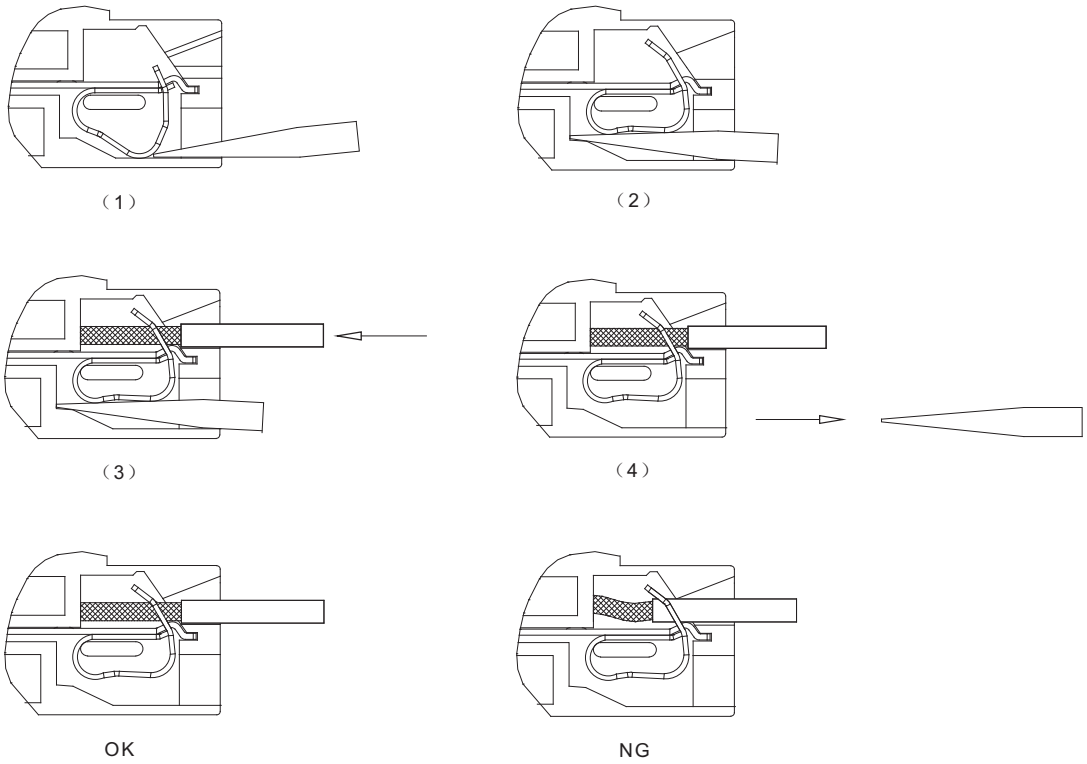

Figure 5

Note : When using wire with insulation protection diameter of 2mm or less, do not insert the insulated part of the wire into the spring clamp opening position .

Things to be noticed when selecting sockets:

1. Please choose suitable relay socket according to the actual mounting environment, relay contact poles and terminal layout. If there is any query on selection, please contact Hongfa for the technical service.
2. Socket which can be mounted with markers is furnished with a marker; as for other related components, they should be selected separately. Please do give clear indication of the types of relay sockets and related components you choose while placing order.
3. The above is only an example of typical socket and related component type which is suitable to HF18FF relay. If you have any special requirements, please contact us.
4. Main outline dimension, outline dimension＞50mm ,tolerance should be ±1mm; 20mm＜outline dimension ≤50mm, tolerance should be ±0.5mm; 5mm＜outline dimension ≤20mm, tolerance should be ±0.4mm; outline dimension≤5mm, tolerance should be ±0.3mm.
5. DIN rail mounting: recommend to use standard rail 35×7.5×1mm, 35×15×1mm.

Disclaimer

The specification is for reference only. See to "Terminology and Guidelines" for more information. Specifications subject to change without notice. We could not evaluate all the performance and all the parameters for every possible application. Thus the user should be in a right position to choose the suitable product for their own application. If there is any query, please contact Hongfa for the technical service. However, it is the user's responsibility to determine which product should be used only.

© Xiamen Hongfa Electroacoustic Co., Ltd. All rights of Hongfa are reserved.