

Model Number

REF-MH23

Reflector with Micro-structure, rectangular 23 mm x 13.8 mm, diagonal mounting hole

Features

- Mounting holes for simple installation
- Micro-structure

Dimensions

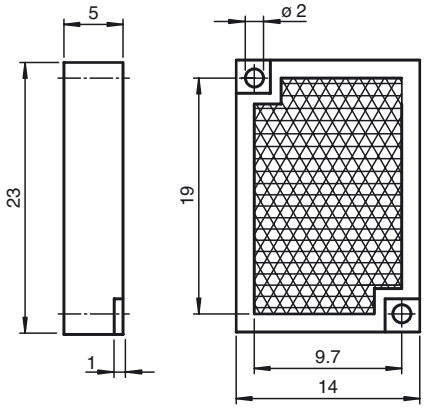

Technical data

General specifications	
Construction type	rectangular
Tripel height	approx. 0.9 mm
Ambient conditions	
Ambient temperature	-20 ... 85 °C (-4 ... 185 °F)
Mechanical specifications	
Material	PMMA/ABS
Dimensions	23 mm x 14 mm x 5 mm
Mounting	mounting holes

Release date: 2012-08-15 16:19 Date of issue: 2012-08-15 113953_eng.xml