MURR ELEKTRONIK
stay connected

M12 female 90° with LED and cable PUR-OB 4x0,34 black UL, CSA 5m

Female 90°
4-pole with 3 × LED (PNP)
Art.-No. 7005 - M12 Lite - (plastic hexagonal screw) on request

Image



Vicarious picture

Approvals

Form	
	12421
Technical Data	
Operating voltage	24 V DC ±25 %
Operating current per contact	max. 4 A
Locking of ports	Screw thread M12 × 1 mm (recommended torque 0.6 Nm) self-securing
Protection	IP65 and IP67 when plugged and screwed down (EN 60529)
Temperature range	-25...+85 °C, depending on cable quality
Cable	
No./diameter of wires	4 × 0.34 mm²
Wire isolation	PP (br, wh, bl, bk)
C-track properties	5 million
Jacket	PUR (UL/CSA)
Outer diameter	approx. 4.7 mm
Bend radius (moving)	10 x outer diameter
Temperature range (fixed)	-40...+80 °C
Temperature range (mobile)	-25...+80 °C
Commercial data	
Net weight	211
Weight unit	Gram
Basic unit	pc.
Customs tariff number	85444290
Unit (piece)	1
Minimum order quantity (piece)	1

All data on this data sheet was compiled carefully.
Liability regarding correctness, completeness, and actuality is limited to gross negligence. Created: 01/14

Comments	
	Plastic housings with good resistance against chemicals and oils. The resistance to aggressive media should be individually tested for your application. Further details on request. Further cable lengths on request.

All data on this data sheet was compiled carefully.
Liability regarding correctness, completeness, and actuality is limited to gross negligence. Created: 01/14

Contact layout

Female

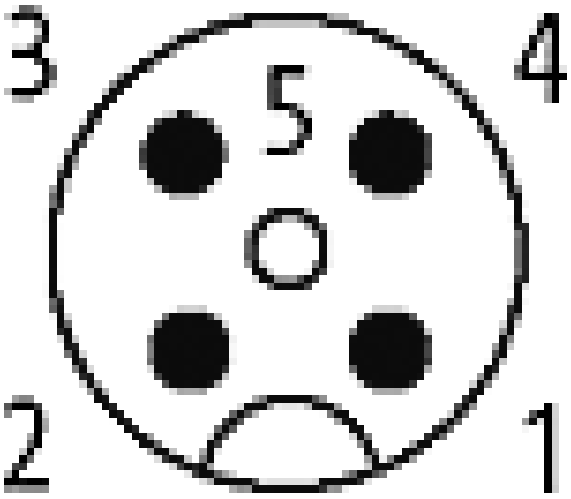

Circuit diagram

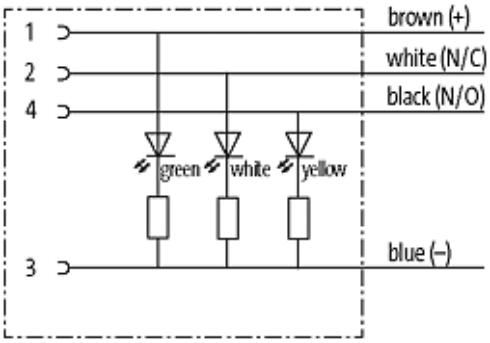

Dimension drawing

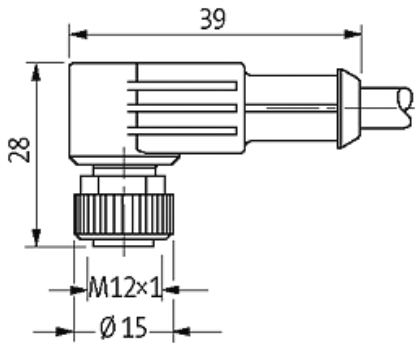

All data on this data sheet was compiled carefully.
Liability regarding correctness, completeness, and actuality is limited to gross negligence. Created: 01/14