E12541

Damping magnet

MAGNET M7.1 NEODYM,SCREW M6

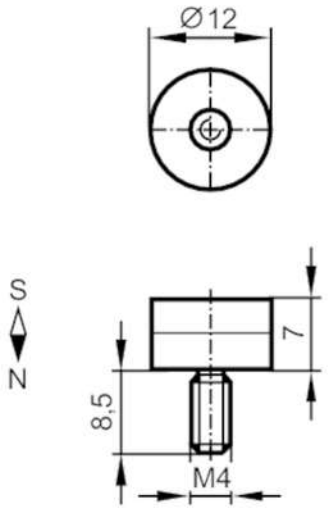

Operating conditions		
Ambient temperature	[°C]	-40...80
Mechanical data		
Weight	[g]	5.2
Dimensions	[mm]	Ø 12 / L = 7.5
Materials		neodymium; plastics
Magnetic field strength	[mT]	280
Remarks		
Pack quantity		1 pcs.