TIMKEN

The Timken Company
4500 Mt Pleasant St. NW
N. Canton, OH 44720
Phone: (234) 262-3000
E-Mail: CustomerCAD@timken.com • **Web site:** www.timken.com

Timken Part Number LM102949 - LM102910, Tapered Roller Bearings - TS (Tapered Single) Imperial

This is the most basic and most widely used type of tapered roller bearing. It consists of two main separable parts: the cone (inner ring) assembly and the cup (outer ring). It is typically mounted in opposing pairs on a shaft.



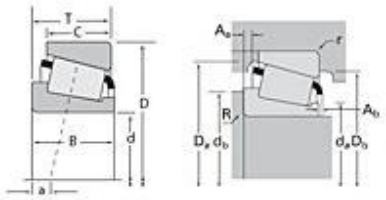

Specifications | Dimensions | Abutment and Fillet Dimensions | Basic Load Ratings | Factors

Specifications

Series	LM102900
Cone Part Number	LM102949
Cup Part Number	LM102910
Design Units	Imperial
Bearing Weight	0.70 lb 0.300 Kg
Cage Type	Stamped Steel

Dimensions

d - Bore	1.7812 in 45.242 mm
D - Cup Outer Diameter	2.8910 in 73.431 mm

B - Cone Width	0.7800 in 19.812 mm
C - Cup Width	0.6200 in 15.748 mm
T - Bearing Width	0.7700 in 19.558 mm

Abutment and Fillet Dimensions

R - Cone Backface "To Clear" Radius[1]	0.14 in 3.560 mm
r - Cup Backface "To Clear" Radius[2]	0.030 in 0.76 mm
da - Cone Frontface Backing Diameter	1.97 in 50.04 mm
db - Cone Backface Backing Diameter	2.20 in 55.88 mm
Da - Cup Frontface Backing Diameter	2.80 in 71.10 mm
Db - Cup Backface Backing Diameter	2.68 in 68.07 mm
Ab - Cage-Cone Frontface Clearance	0.07 in 1.8 mm
Aa - Cage-Cone Backface Clearance	0.01 in 0.3 mm
a - Effective Center Location[3]	-0.18 in -4.60 mm

Basic Load Ratings

C90 - Dynamic Radial Rating (90 million revolutions)[4]	4250 lbf 18900 N
C1 - Dynamic Radial Rating (1 million revolutions)[5]	16400 lbf 72900 N
C0 - Static Radial Rating	18400 lbf 81800 N
C_{a90} - Dynamic Thrust Rating (90 million revolutions)[6]	2220 lbf 9870 N

Factors

K - Factor[7]	1.91
e - ISO Factor[8]	0.31
Y - ISO Factor[9]	1.97
G1 - Heat Generation Factor (Roller-Raceway)	31.1
G2 - Heat Generation Factor (Rib-Roller End)	18
Cg - Geometry Factor	0.0744

[1] These maximum fillet radii will be cleared by the bearing corners.
[2] These maximum fillet radii will be cleared by the bearing corners.
[3] Negative value indicates effective center inside cone backface.
[4] Based on 90 x 10^6 revolutions L_{10} life, for The Timken Company life calculation method. C_{90} and C_{a90} are radial and thrust values.
[5] Based on 1 x 10^6 revolutions L_{10} life, for the ISO life calculation method.
[6] Based on 90 x 10^6 revolutions L_{10} life, for The Timken Company life calculation method. C_{90} and C_{a90} are radial and thrust values for a single-row, $C_{90(2)}$ is the two-row radial value.
[7] These factors apply for both inch and metric calculations. Consult your Timken representative for instruction on use.
[8] These factors apply for both inch and metric calculations. Consult your Timken representative for instruction on use.
[9] These factors apply for both inch and metric calculations. Consult your Timken representative for instruction on use.

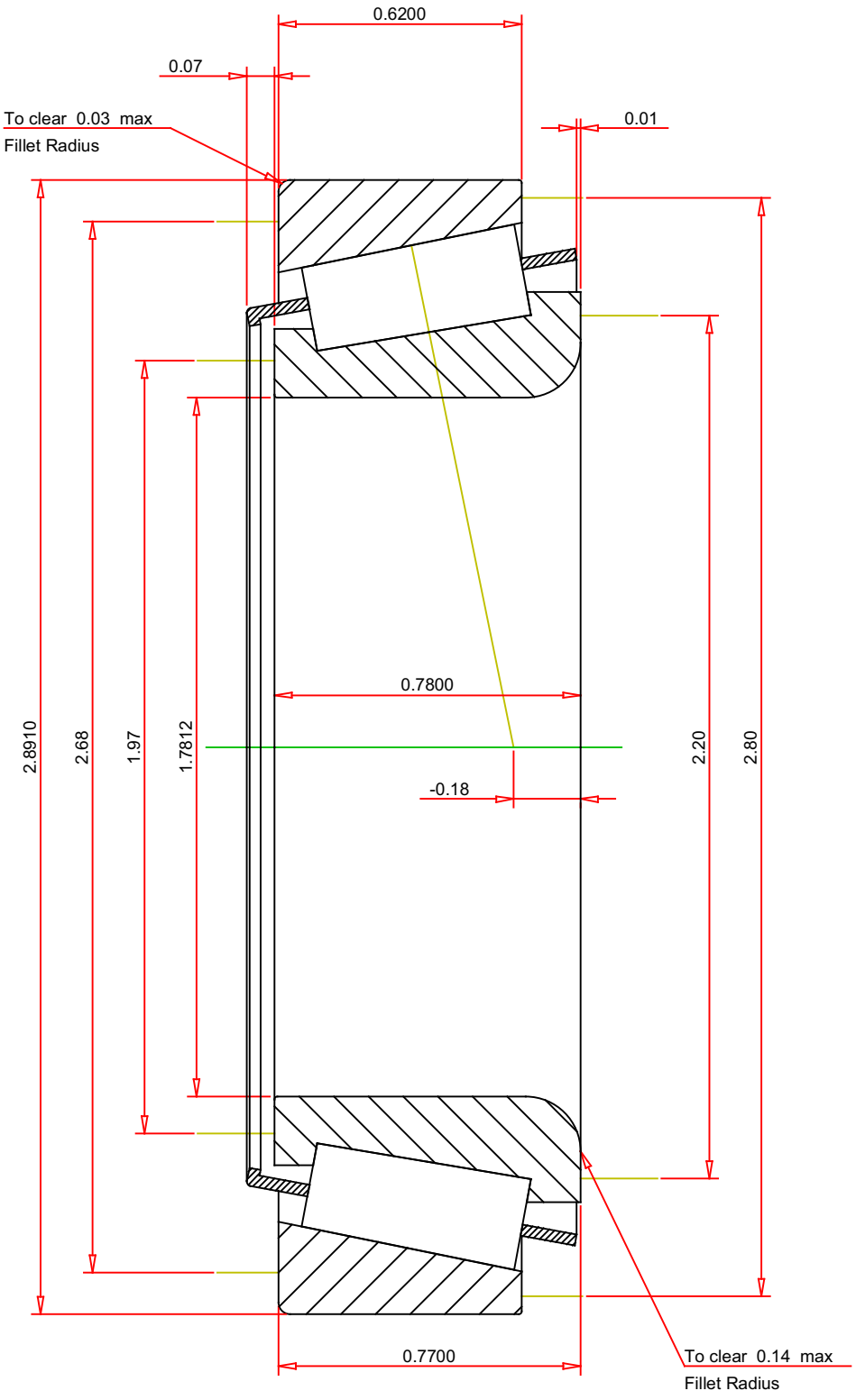

IMPERIAL UNITS

ISO Factor - e	0.31	
ISO Factor - Y	1.97	
Bearing Weight	0.7	lb
Number of Rollers Per Row	23	
Effective Center Location	-0.18	inch

TIMKEN®

THE TIMKEN COMPANY
NORTH CANTON, OHIO USA

LM102949 - LM102910
TS BEARING ASSEMBLY

K Factor	1.91	
Dynamic Radial Rating - C90	4250	lbf
Dynamic Thrust Rating - Ca90	2220	lbf
Static Radial Rating - C0	18400	lbf
Dynamic Radial Rating - C1	16400	lbf

Every reasonable effort has been made to ensure the accuracy of the information contained in this writing, but no liability is accepted for errors, omissions or for any other reason.

FOR DISCUSSION ONLY