TU4105

Temperature transmitter

TU-025CLEM14-A-ZVG/DE

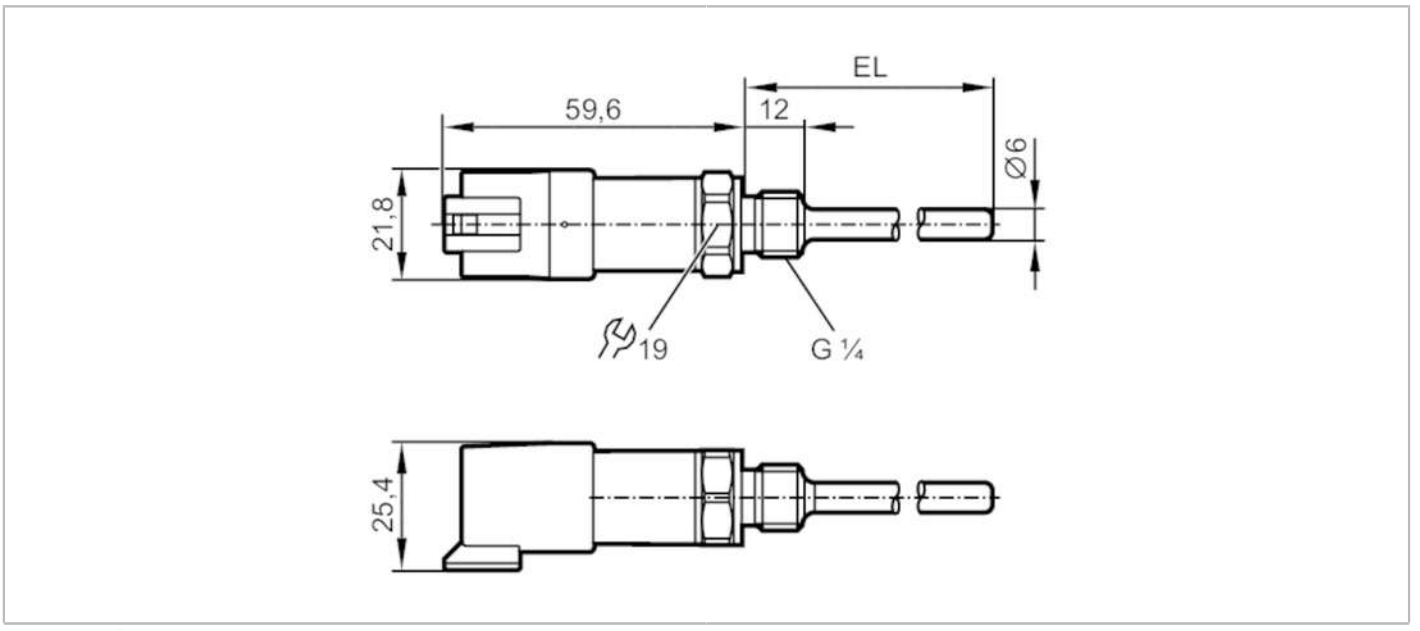

Product characteristics			
Number of inputs and outputs		Number of analogue outputs: 1	
Measuring range		-50...150 °C	-58...302 °F
Process connection		threaded connection G 1/4 external thread	
Installation length EL	[mm]	25	
Application			
Measuring element		1 x Pt 1000; (to DIN EN 60751, class A)	
Media		liquids and gases	
Pressure rating	[bar]	400	
Electrical data			
Operating voltage	[V]	8...32 DC; ("supply class 2" to cULus)	
Current consumption	[mA]	< 30	
Protection class		III	
Reverse polarity protection		yes	
Inputs / outputs			
Number of inputs and outputs		Number of analogue outputs: 1	
Outputs			
Total number of outputs		1	
Output signal		analogue signal	
Number of analogue outputs		1	
Analogue voltage output	[V]	0.5...4.5	
Min. load resistance	[Ω]	2000	
Short-circuit protection		yes	
Overload protection		yes	
Measuring/setting range			
Probe length L	[mm]	13	

TU4105

Temperature transmitter

TU-025CLEM14-A-ZVG/DE

Measuring range		-50...150 °C	-58...302 °F
Resolution			
Resolution of analogue output	[K]	0.1	
Accuracy / deviations			
Precision analogue output	[K]	± 0,3 + (± 0,1 % MS)	
Temperature coefficient	[% of the span / 10 K]	0,1; (in case of deviation from the reference condition 25 ± 5 °C)	
Response times			
Dynamic response T05 / T09	[s]	1 / 3; (to DIN EN 60751)	
Operating conditions			
Ambient temperature	[°C]	-40...100	
Storage temperature	[°C]	-40...100	
Protection		IP 68; IP 69K	
Tests / approvals			
EMC		DIN EN 61000-6-2	
		DIN EN 61000-6-3	
Shock resistance		DIN EN 60068-2-27	50 g (11 ms)
Vibration resistance		DIN EN 60068-2-6	20 g (10...2000 Hz)
MTTF	[years]	849	
UL approval		UL Approval no.	K009
Mechanical data			
Weight	[g]	92.5	
Housing		cylindrical	
Dimensions	[mm]	Ø 21 / L = 84.6	
Materials		stainless steel (316L/1.4404); PPS; FKM	
Materials (wetted parts)		stainless steel (316L/1.4404); FKM	
Process connection		threaded connection G 1/4 external thread	
Probe diameter	[mm]	6	
Installation length EL	[mm]	25	
Remarks			
Remarks		The values for accuracy apply to flowing water.	
		referring to UL: for use on a low voltage circuit with overcurrent protection	
		in accordance with UL873 tab. 28.1 or Imax = 100/Ub (Ub = voltage of the circuit)	
Pack quantity		1 pcs.	

Electrical connection

Connector: 1 x DEUTSCH connector (DT04-3P)

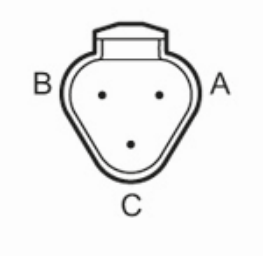

TU4105

Temperature transmitter

TU-025CLEM14-A-ZVG/DE

Connection

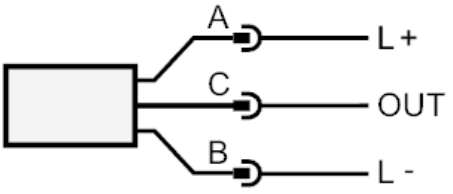

OUT: analogue output