Product Data Sheet 3254 JH

ebmpapst

Die Wahl der Ingenieure



GREEN TECH

3254 JH

INDEX

1 General 3

2 Mechanics 3

2.1 General 3
2.2 Connections 3

3 Operating Data 5

3.1 Operating Data - Electrical Interface - Input 5
3.2 Electrical Operating Data 6
3.3 Operating Data - Electrical Interface - Output 7
3.4 Electrical Features 7
3.5 Aerodynamics 8
3.6 Sound Data 9

4 Environment 9

4.1 General 9
4.2 Climatic Requirements*) 9
4.3 Mechanical Requirements 10

5 Safety 11

5.1 Electrical Safety 11
5.2 Approval Tests 11

6 Reliability 11

6.1 General 11

1 General

Fan type	Fan	
Rotating direction looking at rotor	Clockwise	
Airflow direction	Air outlet over struts	
Bearing system	Ball bearing	
Mounting position	Any	

2 Mechanics

2.1 General

Width	92,0 mm	
Height	92,0 mm	
Depth	38,0 mm	
Mass	0,25 kg	
Housing material	Plastic	
Impeller material	Plastic	
Max. torque when mounted across both mounting flanges Screw size	wire outlet corner: 50 Ncm remaining corners: 110 Ncm ISO 4762 - M4 degreased, without an additional brace and without washer	

2.2 Connections

Electrical connection	Wires	
Lead wire length Tolerance	L = 310 mm +- 10,0 mm	
Wire size (AWG)	22	
Insulation diameter	1,7 mm	
Contact	See drawing	

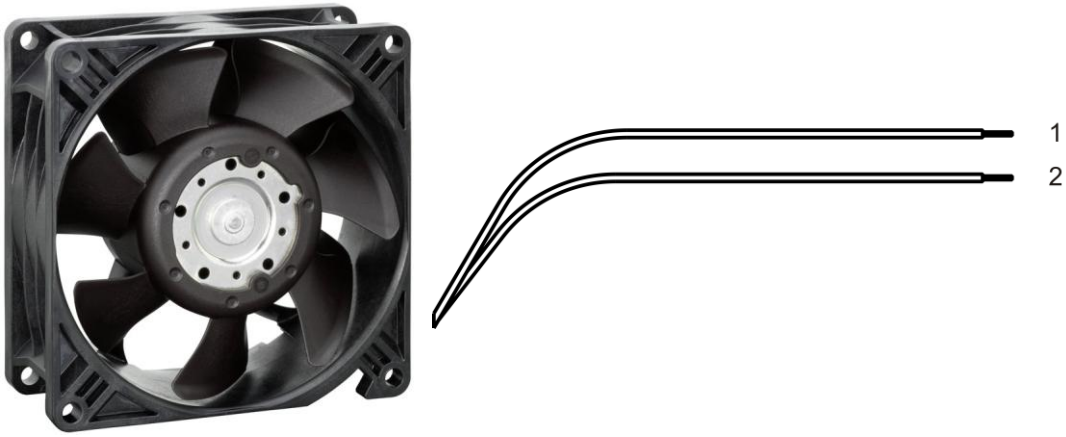

	Colour	Operation
Wire 1	red	+ UB
Wire 2	blue	- GND

The auxilliaries shown on the schematic diagram (which are required for the intended use) are not part of our delivery.

3 Operating Data

3.1 Operating Data - Electrical Interface - Input

Control input	None

3.2 Electrical Operating Data

Measurement conditions: Normal air density = 1,2 kg/m3; Temperature 23°C +/- 3°C; Motor axis horizontal;warm-up time before measuring 5 minutes (unless otherwise specified).In the intake and outlet area should not be any solid obstruction within 0,5 m.

$\Delta p = 0$: corresp. to free air flow (see section 3.5)
I: corresp. to arithm. mean current value

Features	Condition	Symbol	Values		
Voltage range	$\Delta p = 0$	U	14,0 V		26,4 V
Nominal voltage	$\Delta p = 0$	U_N		24,0 V	
Power consumption Tolerance	$\Delta p = 0$ 0001	P	2,2 W +- 20 %	7 W +- 15 %	8,5 W +- 15 %
Current consumption Tolerance	$\Delta p = 0$ 0001	I	157 mA +- 20 %	292 mA +- 15 %	322 mA +- 20 %
Speed Tolerance	$\Delta p = 0$ 0001	n	2.550 1/min +- 15 %	4.100 1/min +- 10 %	4.400 1/min +- 15 %
Starting current consumption				<= 1.000 mA	

3.3 Operating Data - Electrical Interface - Output

Tacho type	None

Alarm type	None

3.4 Electrical Features

Electronic function	Speed-Controlled	
Reversed polarity protection Max. residual current at Un	Rectifying diode IF <= 200 uA	
Locked rotor protection	Auto restart	
Locked rotor current at Un	approx. 1.500 mA	
Clock signal t3/t4 at locked rotor	Typical: 1 s / 9 s t3: 0,7 s... 1,3 s t4: 6,5 s... 11,5 s	

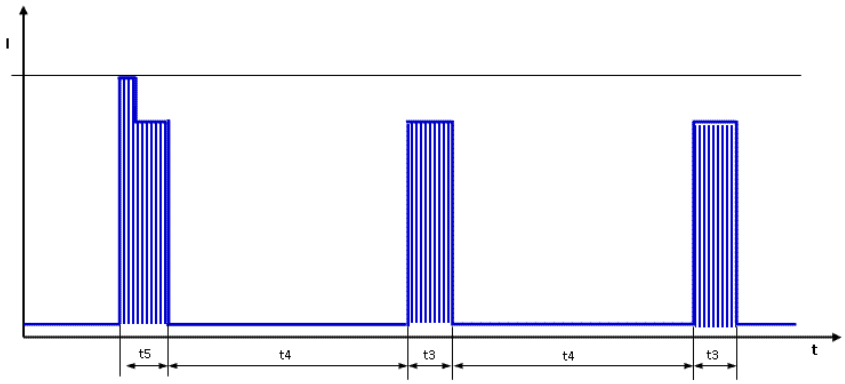

First pulse t5 typical 1,6s (1,3 .. 1,9s) followed by t4. Afterwards cyclical t3/t4.

3.5 Aerodynamics

Measurement conditions:	Measured with a double chamber intake rig acc. to DIN EN ISO 5801. Normal air density = 1,2 kg/m3; Temperature 23°C +/- 3°C; In the intake and outlet area should not be any solid obstruction within 0,5 m. The information is only valid under the specified test conditions and may be changed by the installation conditions. If there are deviations from the standard test conditions, the characteristic values must be checked under the installed conditions.

a.) Operation condition:

4.100 1/min at free air flow

Max. free-air flow (Δp = 0 / $\dot{V}$ = max.)	140,0 m3/h	
Max. static pressure (Δp = max. / $\dot{V}$ =0)	110 Pa	

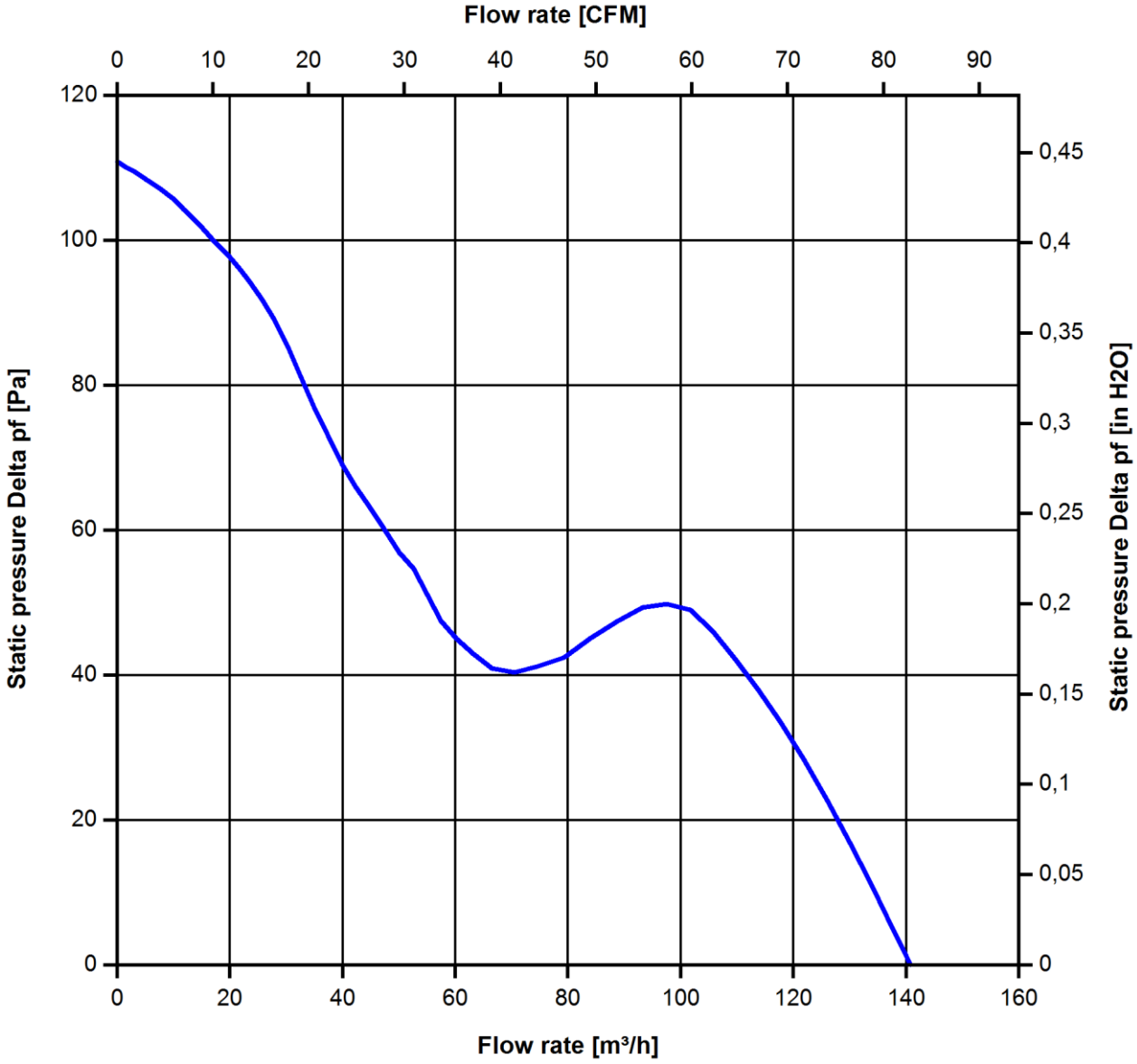

3.6 Sound Data

Measurement conditions:	Sound pressure level: 1 Meter distance between microphone and the air intake. Sound power level: Acc. to DIN 45635 part 38 (ISO 10302) Measured in a semianchoic chamber with a background noise level of Lp(A) < 5 dB(A) For further measurement conditions see section 3.5

a.) Operation condition:

4.100 1/min at free air flow

Optimal operating point	100,0 m3/h @ 44 Pa	
Sound power level at the optimal operating point	5,8 bel(A)	
Sound pressure level at free air flow, measured in rubber bands	46,0 dB(A)	

4 Environment

4.1 General

Min. permitted ambient temperature TU min.	-20 °C	
Max. permitted ambient temperature TU max.	70 °C	
Min. permitted storage temperature TL min.	-40 °C	
Max. permitted storage temperature TL max.	85 °C	

4.2 Climatic Requirements*)

Humidity requirements	humid heat, constant; according to DIN EN 60068-2-78, 14 days	
Water exposure	None	
Dust requirements	None	
Salt fog requirements	None	

*) Permittet application area:
The product is intended for use in sheltered rooms with controlled temperature and controlled humidity. Directly exposure to water must be avoided.

Pollution degree 1 (according DIN EN 60664-1)
There is either no pollution or it occurs only dry, non-conductive pollution. The pollution has no negative impact.

4.3 Mechanical Requirements

severity level	stationary use		
1	storage / transportation	Random vibration not in use IEC 60068-2-64 Frequency range / ASD G_{RMS} Axes of vibration Test duration	 Random vibration 5 - 20 Hz : 1,0 m^2 / s^3 20 - 500 Hz : - 3 dB / Oct 0,91 G 3 3 x 30 min
	storage / transportation	Bump not in use IEC 60068-2-29 Shock spectrum Acceleration Duration Number of bumps (+X, -X, -Y, +Y, -Z, +Z) Total bumps	 Bump half sine 18 G 6 ms 100 in each direction 600
	stationary use	Random vibration in use IEC 60068-2-64 Frequency range / ASD G_{RMS} Axes of vibration Test duration	 Random vibration 5 - 10 Hz : +6 dB / Oct 10 - 50 Hz : 1,0 m^2 / s^3 50 - 200 Hz : - 6 dB / Oct 0,65 G 3 3 x 30 min
	stationary use	Bump in use IEC 60068-2-29 Shock spectrum Acceleration Duration Number of bumps (+X, -X, -Y, +Y, -Z, +Z) Total bumps	 Bump half sine 5 G 11 ms 100 in each direction 600

5 Safety

5.1 Electrical Safety

Dielectric strength DIN EN 60950 (VDE 0805) and DIN EN 60335 (VDE 0700) A.) Type test Measuring conditions: After 48h of storage at 95% R.H. and 25°C. No arcing or breakdown is allowed! All connections together to ground. B.) Routine test Measuring conditions: At indoor climate. No arcing or breakdown is allowed! All connections together to ground.	500 VAC / 1 Min. 500 VAC / 1 Sec.	
Isolation resistance Measuring conditions: After 48h of storage at 95% R.H. and 25°C measured with U=500 VDC for 1 min.	RI > 10 MOhm	
clearance / creepage distance	1,0 mm / 1,2 mm	
Protection class	III	

5.2 Approval Tests

CE	EC Declaration of Conformity	Yes
EAC	Eurasian Conformity	Yes
UL	Underwriters Laboratories	Yes / UL507, Electric Fans
VDE	Association for Electrical, Electronic and Information Technologies	Yes / Approval acc. to EN 60950 (VDE 0805) - Information technology equipment
CSA	Canadian Standards Association	Yes / C22.2 No. 113 Fans and Ventilators
CCC	China Compulsory Certification	No

6 Reliability

6.1 General

Life expectancy L10 at TU = 40 °C	85.000 h	
Life expectancy L10 at TU max.	42.500 h	

Copying of this document, and giving it others and the use or communication of the contents thereof, are forbidden without express authority. Offenders are liable to the payment of damages. All rights are reserved in the event of the grant of a patent or the registration of a utility model or design.

Schutzvermerk nach DIN ISO 16016 beachten !
Refer to protection notice DIN ISO 16016 !

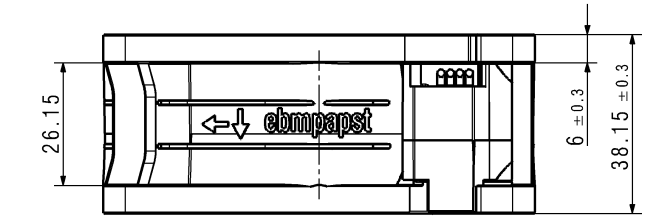

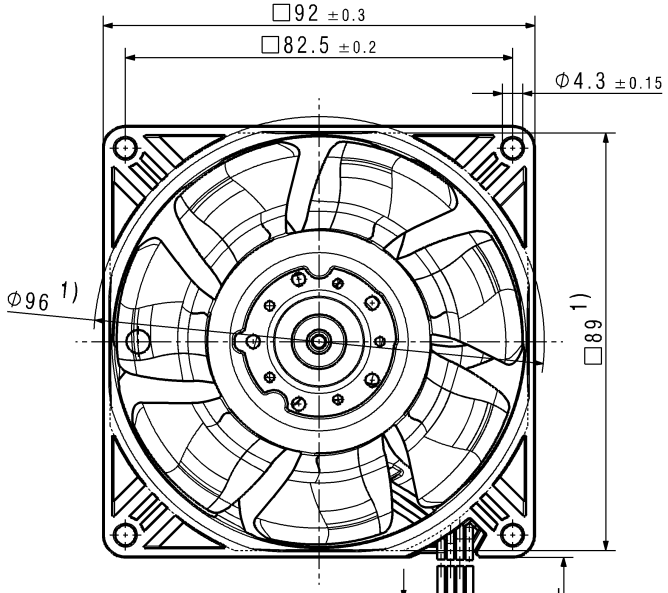

1)Maße für Montagewand
1)dimension for worktop mounting

-Anzahl und Laenge der Litzen siehe Produktspezifikation
number and length of the wires, look at the product specification

-Kein Axialspiel bei Kugellager durch Federausgleich
no axial clearence of ball bearings conditional on a pre-load spring

SAP-Status/State	Aend.-Nr./ Change-No.	CATIA-System-Version/ CATIA-System-Version	CAD-Umgebung/ CAD-Environment
		9293512001 CPR000-	
		3D-Referenzmodell / 3D-Referencemodel	

	Datum	Name
Bearb./ Drawn		
Gepr./ Checked		
Freig./ Releas.		

Tolerierung / Tolerances:

Allgemeintoleranzen / Gen. Tolerances:

ebmpapst
ebm-papst St.Georgen GmbH & Co KG

Werkstoff / Material:	Volumen / Volume (mm^3):
	Gewicht / Mass (g):

Artikel / Title:

Zchg.-Nr./ Drawing No:	Ers.f.Zchg. / Replaces:

Dokumenttyp / Type of Document	Teildokument (Blatt/Page)	Index / Index	Format / Size:	Massstab/Scale