# 22209 EK

SKF Explorer

## Dimensions

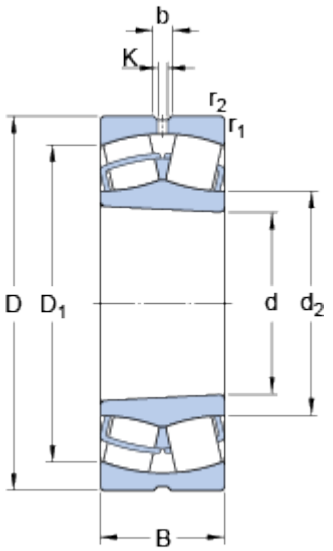


| | | | |
|---|---|---|---|
| d | | 45 | mm |
| D | | 85 | mm |
| B | | 23 | mm |
| $d_2$ | ≈ | 54.4 | mm |
| $D_1$ | ≈ | 74.4 | mm |
| b | | 5.5 | mm |
| K | | 3 | mm |
| $r_{1,2}$ | min. | 1.1 | mm |

Tapered bore, taper 1:12

## Abutment dimensions

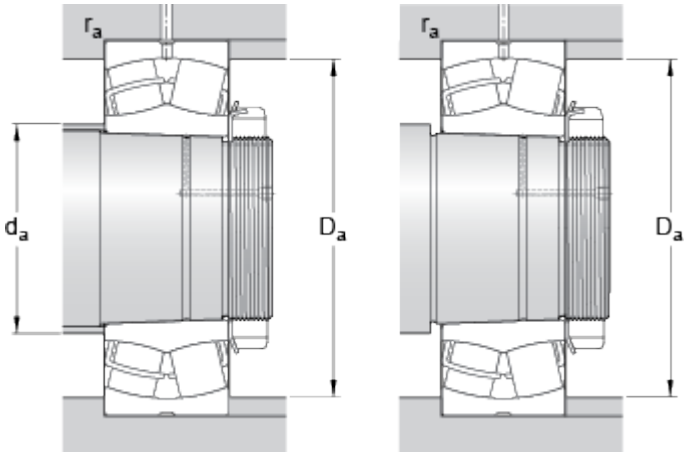


| | | | |
|---|---|---|---|
| $d_a$ | min. | 50 | mm |
| $d_a$ | max. | 54 | mm |
| $D_a$ | max. | 78 | mm |
| $r_a$ | max. | 1 | mm |

## Calculation data

| | | | |
|---|---|---|---|
| Basic dynamic load rating | C | 104 | kN |
| Basic static load rating | $C_0$ | 100 | kN |
| Fatigue load limit | $P_u$ | 10.8 | kN |
| Reference speed | | 7500 | r/min |
| Limiting speed | | 10000 | r/min |
| Calculation factor | e | 0.26 | |
| Calculation factor | $Y_1$ | 2.6 | |
| Calculation factor | $Y_2$ | 3.9 | |
| Calculation factor | $Y_0$ | 2.5 | |

## Mass

| | | | |
|---|---|---|---|
| Mass | | 0.57 | kg |

**Mounting information**

| | | | |
|---|---|---|---|
| Recommended lock nut tightening angle | α | 130 | ° |