UK +44 (0)151 220 2500 // USA +1 855 958 2502 //
www.brainboxes.com // sales@brainboxes.com

US-757

USB-C to 2 Port RS232 Serial Server Hub

- High retention USB socket for an unshakeable connection
- Comes with 1m USB-B to USB-C cable
- Light industrial specification: IP-30
- 0˚C to +60˚C/32˚F to +140˚
- Drivers for all popular operating systems
- Wall mounts (optional DIN rail mounting kit available)







Compact design - wall mountable using mounting screw holes, optional DIN Rail mount accessory available

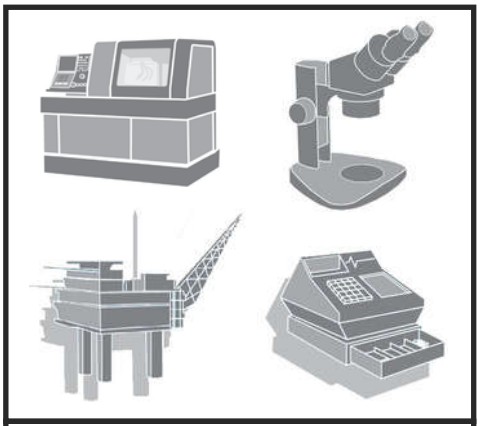

Example applications:

CNC Machine
Laboratory
Oil Rig
Point of Sale



High retention USB connection requires a minimum withdrawal requirement of 15N (thats a force of 1.5Kg or 3.4lbs)

UK +44 (0)151 220 2500 // USA +1 855 958 2502 //
www.brainboxes.com // sales@brainboxes.com

US-757 USB-C to 2 Port RS232 Serial Server Hub

IP-30 rated non-conducting case

High retention USB connector for an unshakeable connection

Integral wall mounts



Orange color-coded insulator to differentiate from standard USB connectors

0°C to +60°C/32°F to +140° temperature range

USB connection requires a minimum withdrawal requirement of 15N

Plug and play with signed drivers

Works across the full spectrum of baud rates up to 921,600 including standard and arbitrary values

LED Information		
Status LED	Green Power	On
Serial Port LEDs	Green Light On	Data TX
	Green Light On	Data RX
Port		
Connector	DB9 Connector - 9 Pin Male connector (9 Pin Male)	
FIFO Size	384 RX FIFO + 128 TX FIFO	
Operating Distance	EIA - RS232 Standard	
Cable	USB cable Type A to B 1 metre 3ft	
Power Supply		
Power Supply Input	+5V through USB cable (supplied)	
Power Consumption	100mA @ 3.3V	
Environmental		
Operating Temperature	-0°C to +60°C/-32°F to +140°F	
Storage Temperature	-0°C to +60°C/-32°F to +140°F	
Port Settings - RS232		
Baud Rate	From 110 - 1 MegaBaud - Any custom Baud rate accepted	
Data Bits	7 or 8	
Parity	Odd, Even, None, Mark or Space	
Stop Bits	1 or 2	
Flow Control	RTS/CTS, DSR/DTR, XON/XOFF	
Tx/Rx Modes	Point to Point	

UK +44 (0)151 220 2500 // USA +1 855 958 2502 //
www.brainboxes.com // sales@brainboxes.com

US-757 USB-C to 2 Port RS232 Serial Server Hub

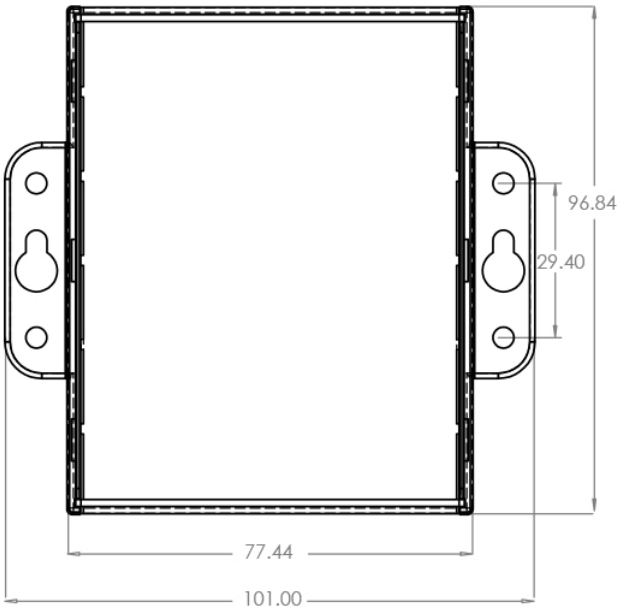

RS232

Pin 1	DCD
Pin 2	RXD
Pin 3	TXD
Pin 4	DTR
Pin 5	GND
Pin 6	DSR
Pin 7	RTS
Pin 8	CTS
Pin 9	RI

RS232 Pinout (9 Pin Male)

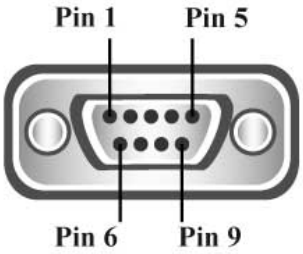

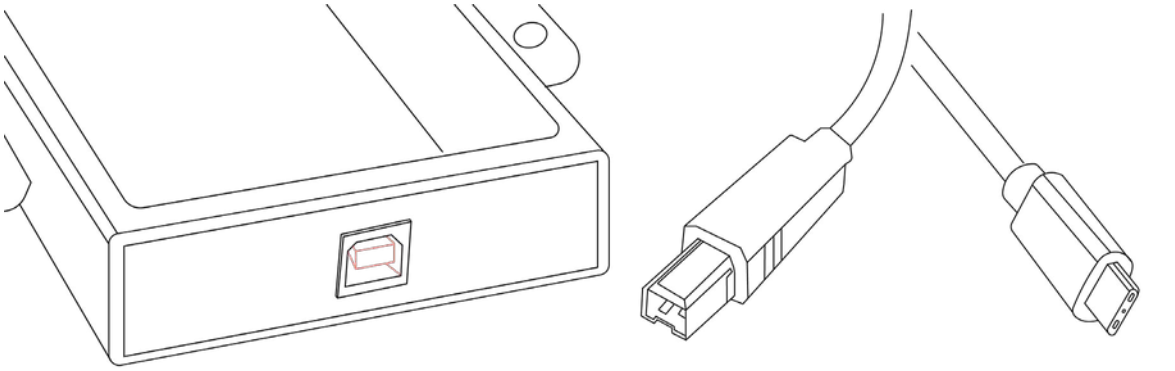

Software

OS Compatibility	Brainboxes' software provides a TCP or Serial COM port interface. All software versions and updates available to download from our website.
Microsoft	Windows 8, Windows 8.1, Windows 10 Windows Server 2016 Windows Server 2019

Windows 8 Compatible | Windows 8.1 Compatible | Windows 10 Compatible | Windows Server 2016 Certified | Windows Server 2019 Certified

Lifetime Warranty and Support:
We can help with every aspect of your project, from getting you up and running to custom application.

UK +44 (0)151 220 2500 // USA +1 855 958 2502 //
www.brainboxes.com // sales@brainboxes.com

US-757 USB-C to 2 Port RS232 Serial Server Hub

Packaging Information	QSG, Device, USB-C Cable (signed drivers are automatically downloaded by Windows OS)
Product Weight	0.109 kg, 3.84 ounces
Product Dims	102x100x27 mm, 4.0x3.9x1.1 inches
Packaged Weight	0.155 kg, 5.47 ounces
Packaged Dims	160x135x45 mm, 6.3x5.3x1.8 inches
GTIN Universal Code	837324004625
Industry Approvals	Microsoft Certified Gold Partner, WEEE, RoHS, AEO (C-TPAT), CE, UKCA
HTS	8471800000
ECCN	49449A
CAGE	8QCY6
Warranty	Lifetime - online registration required
Support	Lifetime Web, Email & Phone Support from fully qualified, friendly staff who work in and alongside the Product Development Team
Standards	ISO9001, ISO14001
OEM option	Available for bulk buy OEM
COO (Country of Origin)	GB

USB-C Range

USB-C adaptors available in a range of formats and specifications

www.brainboxes.com



US-720

USB-C to 1 Port
422/485 Industrial USB to
Serial Adaptor



US-735

USB-C to 1 Port
RS232 Industrial USB to
Serial Adaptor



US-759

USB-C to 1 Port
RS232 Industrial Isolated
USB to Serial Adaptor

© Brainboxes 2021