# FB01F1N

FUSE HOLDER UL RECOGNIZED AND CSA CERTIFIED, FOR 10X38MM FUSES. 32A RATED CURRENT AT 690VAC, 1P+N. WITHOUT STATUS INDICATOR. 2 MODULES



| | | | |
|---|---|---|---|
| Product designation | | | Fuse holder |
| Product type designation | | | FB |
| Number of DIN modules | | | 2 |
| Operating voltage type | | | AC |
| **Electrical features** | | | |
| Rated current (In) | | A | 32 |
| Rated operational voltage | | V | 690 |
| IEC Utilization category | | | AC22B 500V - AC21B 690V |
| Total power dissipation | | W | 3 |
| Derating factor of rated current In for different ambient temperature | | | |
| | 20°C | | 1 |
| | 30°C | | 0.95 |
| | 40°C | | 0.9 |
| | 50°C | | 0.8 |
| | 60°C | | 0.7 |
| | 70°C | | 0.5 |
| Derating factor of rated current In for side by side fuse holders (poles) | | | |
| | 1-4 | | 1 |
| | 5-6 | | 0.8 |
| | 7-9 | | 0.7 |
| | ≥10 | | 0.6 |
| **Ambient conditions** | | | |
| Operating temperature | | | |
| | min | °C | -40 |
| | max | °C | 70 |
| Storage temperature | | | |
| | min | °C | -40 |
| | max | °C | 80 |
| Max altitude | | m | 3000 |
| **Mechanical feautures** | | | |
| Operating position | | | |
| | normal | | Vertical plan |
| | allowable | | Any |
| Mounting | | | 35mm DIN rail |
| Tightening torque for terminals | | | |
| | max | Nm | 2.5 |
| | max | lbft | 1.8 |
| Conductor section | | | |
| | - Flexible max (IEC) | mm² | 16 |
| | - Flexible max (AWG) | | 8 |
| | - Rigid max (IEC) | mm² | 16 |
| | - Rigid max (AWG) | | 8 |
| Weight | | g | 134 |
| Frontal IP degree | | | IP20 |


The characteristics described in this document are subject to updates or modifications at any time. The descriptions, technical and functional information, illustrations and instructions in this brochure are purely illustrative, and are consequently not contractually binding

## Dimensions

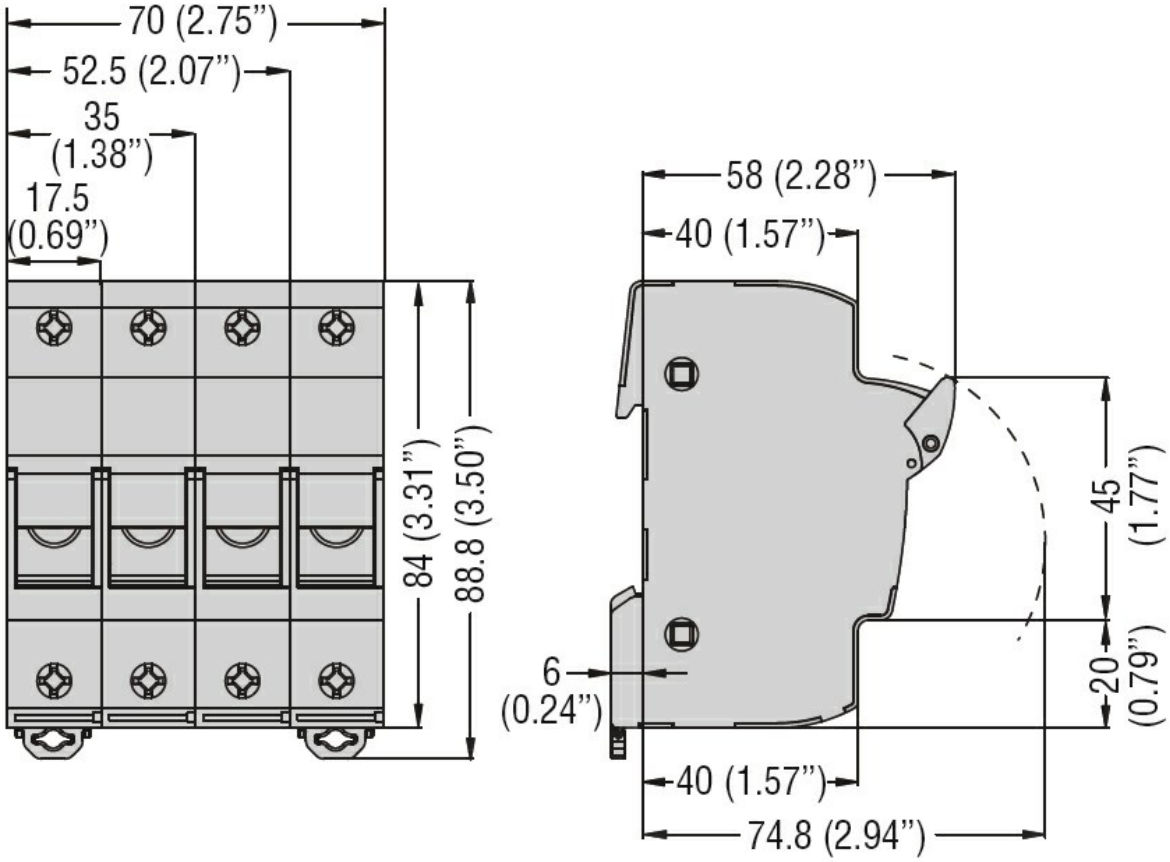


## Certifications and compliance

Compliance

| |
|---|
| CSA C22.2 n°4248.1 |
| IEC/EN 60269-1 |
| IEC/EN 60269-2 |
| IEC/EN 60947-1 |
| IEC/EN 60947-3 |
| UL 4248-1 |

Certifications

| |
|---|
| cURus |
| EAC |


The characteristics described in this document are subject to updates or modifications at any time. The descriptions, technical and functional information, illustrations and instructions in this brochure are purely illustrative, and are consequently not contractually binding