PN4221

Pressure sensor with display

PN-250-SBN14-HFBOW/LS/ /V

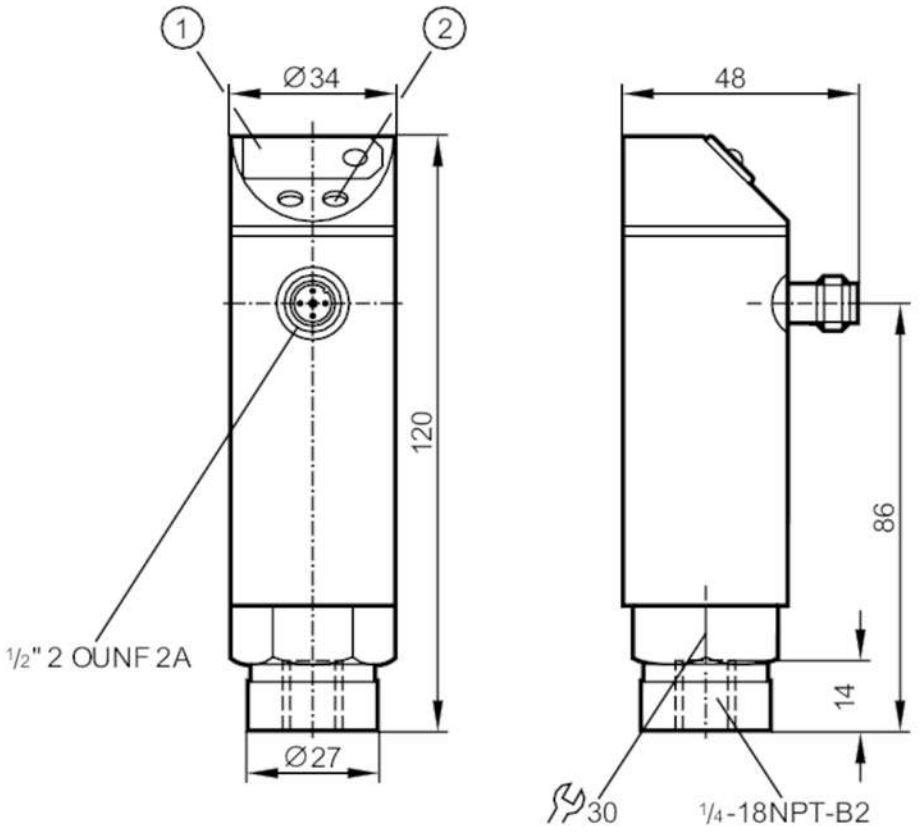

1 7-segment LED display
2 programming button

Product characteristics				
Number of inputs and outputs		Number of digital outputs: 1		
Measuring range		0...250 bar	0...3630 psi	0...25 MPa
Process connection		threaded connection 1/4" NPT internal thread		
Application				
Application		for industrial applications		
Media		liquids and gases		
Conditionally suitable for		use in gases at pressures > 25 bar only on request		
Medium temperature	[°C]	-25...80		
Min. bursting pressure		850 bar	12300 psi	85 MPa
Pressure rating		400 bar	5800 psi	40 MPa
Type of pressure		relative pressure		
Electrical data				
Operating voltage tolerance	[%]	< 10		
Operating voltage	[V]	90...250 AC		
Nominal voltage AC	[V]	< 250		
Current consumption	[mA]	< 10		
Min. insulation resistance	[MΩ]	100; (500 V DC)		

PN4221

Pressure sensor with display

PN-250-SBN14-HFBOW/LS/ /V

Protection class		II		
Reverse polarity protection		no		
Power-on delay time	[s]	0.2		
Integrated watchdog		yes		
Inputs / outputs				
Number of inputs and outputs		Number of digital outputs: 1		
Outputs				
Total number of outputs		1		
Output signal		switching signal		
Electrical design		Triac		
Number of digital outputs		1		
Output function		normally open / normally closed; (parameterisable)		
Max. voltage drop switching output AC	[V]	2		
Permanent current rating of switching output AC	[mA]	250; ((...70 °C) 1000 (...60 °C) 1500 (...45 °C) 2500 (...20 °C))		
Switching frequency AC	[Hz]	< 160		
Short-circuit proof		no		
Overload protection		no		
Measuring/setting range				
Measuring range		0...250 bar	0...3630 psi	0...25 MPa
Set point SP		2...250 bar	40...3630 psi	0.2...25 MPa
Reset point rP		1...249 bar	20...3610 psi	0.1...24.9 MPa
In steps of		1 bar	10 psi	0.1 MPa
Accuracy / deviations				
Switch point accuracy	[% of the span]	< ± 1,0		
Repeatability	[% of the span]	< ± 0,1; (with temperature fluctuations < 10 K)		
Linearity deviation	[% of the span]	< ± 0,5		
Hysteresis deviation	[% of the span]	< ± 0,1		
Long-term stability	[% of the span]	< ± 0,1; (per year)		
Temperature coefficient zero point	[% of the span / 10 K]	< ± 0,2; (-25...80 °C)		
Temperature coefficient span	[% of the span / 10 K]	< ± 0,3; (-25...80 °C)		
Response times				
Delay time programmable dS, dr	[s]	0, 0,2,...10, 11,...50		
Damping process value dAP	[s]	0...4		
Software / programming				
Adjustment of the switch point		programming button		

PN4221

Pressure sensor with display

PN-250-SBN14-HFBOW/LS/ /V

Parameter setting options		hysteresis / window; normally open / normally closed; switch-on/switch-off delay; Damping; adaptation of displayed values; display can be rotated and switched off; Display unit	
Operating conditions			
Ambient temperature	[°C]	-25...80	
Storage temperature	[°C]	-40...100	
Protection		IP 67	
Tests / approvals			
EMC		EN 61000-4-2 ESD	4 kV CD / 8 kV AD
		EN 61000-4-3 HF radiated	10 V/m
		EN 61000-4-4 Burst	2 kV
		EN 61000-4-6 HF conducted	10 V
Shock resistance		DIN IEC 68-2-27	50 g (11 ms)
Vibration resistance		DIN IEC 68-2-6	20 g (10...2000 Hz)
MTTF	[years]	224.58	
Pressure Equipment Directive		Sound engineering practice; can be used for group 2 fluids; group 1 fluids on request	
Mechanical data			
Weight	[g]	358.25	
Housing		cylindrical	
Dimensions	[mm]	Ø 34 / L = 120	
Materials		stainless steel (304/1.4301); PC; PBT; PA; FKM	
Materials (wetted parts)		stainless steel (303/1.4305); ceramics; FKM	
Min. pressure cycles		100 million	
Process connection		threaded connection 1/4" NPT internal thread	
Restrictor element integrated		no (can be retrofitted)	
Displays / operating elements			
Display		switching status	LED, red
		function display	7-segment LED display
		measured values	7-segment LED display
Electrical connection			
Required protection		miniature fuse to IEC60127-2 sheet 1; ≤ 5 A; fast acting	
Remarks			
Remarks		n.c. = not used	
Pack quantity		1 pcs.	

Electrical connection

Connector: 1 x 1/2"; coding: C



PN4221

Pressure sensor with display

PN-250-SBN14-HFBOW/LS/ /V

Connection

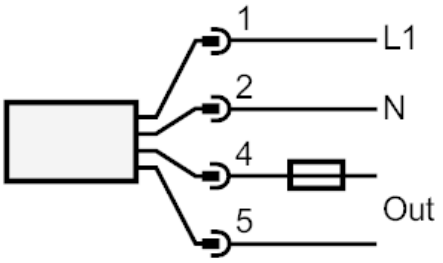

Note miniature fuse to IEC60127-2 sheet 1 ≤ 5 A fast acting