Inductive sensor

BES 516-3005-E5-C-S49
BES00H2

BALLUFF
sensors worldwide

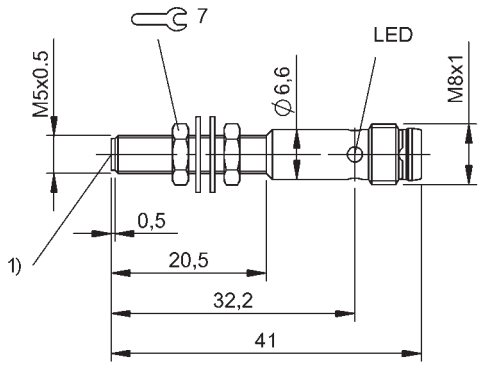

1) Active surface

- **PNP**
- **Normally open (NO)**
- **0.80 mm**
- **Flush (shielded)**
- **Connector, M08x1-S49**

LISTED IND. CONT. EQ. 81U2 for use in the secondary of a class 2 source of supply

IND. CONT. EQ 81U2 for use in the secondary of a class 2 source of supply Environmental - Type 1 Enclosure

General attributes	
Approvals / Conformity	cULus
	CE
Basic standard	IEC 60947-5-2
Enclosure Type per IEC 60529	IP67
Function indicator	Yes
Operating distance marking	■
Polarity reversal protected	Yes
Power indicator	No
Short circuit protected	Yes
Electrical attributes	
Connection type	Connector
Eff. operating current Ie	100 mA
Eff. operating voltage Ue DC	24.0 V
Electrical version	DC, direct current
Load capacitance max. (at Ue)	1.000 µF
Max. no-load cur. Io undamped	2.0 mA
Minimum operating current Im	0 mA
No-load current Io damped max.	6.0 mA
Operating voltage UB max. DC [V]	30.0 V
Operating voltage UB min. DC [V]	10.0 V
Rated insulation voltage Ui	75 VDC
Rated short circuit current	100 A
Ripple max. (% of Ue)	10 %
Switching freq. f max. (at Ue)	5000 Hz
Switching function	Normally open (NO)
Switching output	PNP
Voltage drop static max.	2.0 V
Mechanical attributes	
Ambient temperature Ta max.	70 °C
Ambient temperature Ta min.	-25 °C
Assured operating distance Sa	0.65 mm
Connector type	M08x1-S49
Depth	41.0 mm
Diameter d1	M05x0.5
Eff. operating distance Sr	0.80 mm
Housing material	Stainless steel
Mech. installation condition	Flush (shielded)
Mounting length	20.0 mm
Rated operating distance Sn [mm]	0.80 mm
Sensing face material	PBT
Tightening torque	1 Nm

Additional text
The sensor is functional again after the overload has been eliminated.
EMC: Surge immunity; external protection circuit required. Document 825345, Section 2.

